CONVEYAIR™ GRAIN VAC

MODELS 5005 & 6006

Thor MANUFACTURING LTD.

OWNERS MANUAL

INTRODUCTION

Congratulations, you have selected a Grain Vac which is designed and engineered to help you make farming Easier , Healthier and Safer.

Our knowledgeable engineering and production staff have built both performance and durability into each Conveyair. Our grain vacs have been sold to farmers in Canada, Europe, the USA, Australia and the Middle East.

To get the maximum benefit from your CONVEYAIR please read the owners manual carefully.

HOW TO USE THIS MANUAL

We recommend that you study this manual from beginning to end BEFORE operating your new Conveyair Grain Vac. We have tried to keep it brief and to the point. It is important that you pay special attention to the safety cautions in this book and on your equipment.

Conveyair ready for transportation

SAFETY WARNINGS AND SYMBOLS

As with all farm equipment, it is extremely important that you familiarize yourself with all the safety precautions and follow them wisely.

Words like CAUTION or DANGER will tell you about things that could hurt you if you were to ignore the warning!

This safety symbol means:

"Don't"
"Don't do this" or
"Don't let it happen"

INDEX

DESCRIPTION	PAGE
Introduction	2
Warranty Registration	-
Sign Off form	-
Serial Number registration	4
Specifications	4
Safety Precautions	6 - 9
Transport	10
Setting Up	11 -14
Break in	14
Operation	15 - 18
a. Short distance	16
b. Long distance	17
c. Clean up	17
d. Bins & Storage	18
Accessories	19
Lubrication	20 - 21
Service Record	22
Service & Maintenance	23 - 27
Torque Charts	28
Hydraulic Schematics	29 - 31
Trouble Shooting	32 - 34
Storage	35
Parts Manual	36 - 53
Warranty (back page)	54

SERIAL NUMBERS

When you order parts or require service, provide your dealer with complete **PARTS, MODEL & SERIAL NUMBER(S)!**

You will find TWO serial numbers on your unit, we suggest you enter these in your manual now for quick reference later:

LOCATIONS

1. Machine Serial number -
Look at rear of machine, right side

2. Blower Serial number -
Look at front of machine at side of blower facing receiver tank

.....
Machine Serial Number

.....
Blower Serial Number

SPECIFICATIONS

	5005	6006
Minimum Horse Power (1000 PTO RPM)	80	110
Length	2.43 m (96")	2.43 m (96")
Width	2.36 m (93")	2.36 m (93")
Height (transport)	2.54 m (100")	2.54 m (100")
Clearance (under cyclone)	3.50 m (138")	3.50 m (138")
Weight (complete with accessories)	1106 Kg (2440lb)	1204 Kg (2650 lb)
Tire size	P205/75R15)	P205/75R15
Tire Pressure	35 PSI	35 PSI

SPECIFICATIONS ARE SUBJECT TO CHANGE WITHOUT NOTICE

Read and understand the operation manual before operating the CONVEYAIR. Always follow safety and operating instructions as outlined in this manual Familiarize yourself with the terms shown on this page.

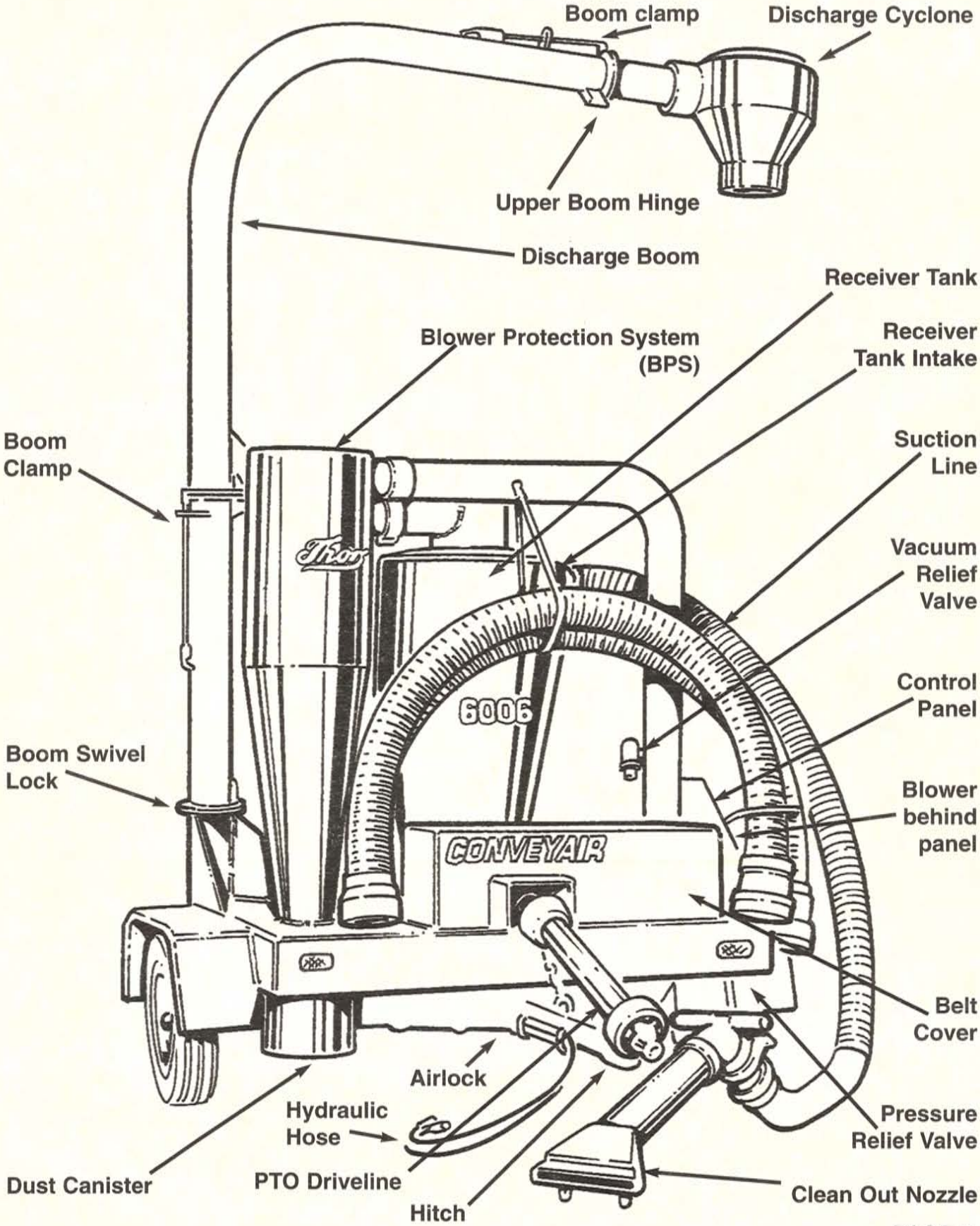

SAFETY PRECAUTIONS

Thor Manufacturing is concerned about your safety and is committed to the prevention of accidents. SAFE AND CORRECT USE of this equipment will help prevent accidents. **Be sure anyone who operates the CONVEYAIR GRAIN VAC has read and understood this manual! BEFORE operating, maintaining, adjusting or unplugging the grain vac.** Review at least annually as per OSHA (Occupational Safety and Health Administration) regulations 1928.57

Do not modify the equipment in any way. Unauthorized modifications may impair the function and/or safety and could affect the life of the equipment.

SAFETY WARNINGS AND SYMBOLS

This Safety Alert symbol means -
ATTENTION!
BE ALERT!
YOUR SAFETY IS INVOLVED!

WATCH OUT FOR THIS SYMBOL ON YOUR CONVEYAIR GAIN VAC AND THROUGH-OUT THE MANUAL.

SIGNAL WORDS:

DANGER - An immediate and specific hazard which WILL result in severe personal injury or death if the proper precautions are not taken.

WARNING - A specific hazard or unsafe practice which COULD result in severe personal injury or death if proper precautions are not taken.

CAUTION - Unsafe practices COULD result in personal injury if proper practices are not taken, or as a reminder of good safety practices.

OPERATING SAFETY

1. Wear appropriate ear protection.

2. Never wear ill-fitting, baggy or frayed clothing when working around or on any of the drive system components.

3. Always know where all overhead electrical wires are located and stay away from them.

4. Do not allow riders.

5. Install and secure all guards and shields before starting or operating.

6. Keep hands, feet, hair and clothing away from moving parts.

7. Place all controls in neutral, stop tractor engine, set park brake, remove ignition key and wait for all moving parts to stop before servicing, adjusting, repairing or unplugging.

8. Place all tractor and machine controls in neutral before starting.

9. Never operate the Conveyair and power unit inside a closed building.

10. Clear area of bystanders, especially small children, before starting.

11. Stay away form PTO shaft, intake nozzle and discharge when engaging PTO.

12. Keep all hydraulic lines, fittings and couplers tight and free of leaks.

13. Clean reflector, SMV and lights before transporting.

14. Use proper lighting when transporting the Conveyair.

15. Use a retainer or drawbar pin, secure PTO shaft and install a safety chain when attaching to tractor.

16. Stay away from overhead electrical wires when operating boom or when moving.

17. Do not remove receiver inspection window while tractor is running.

18. Do not remove elbow from airlock outlet when tractor is running.

19. Stay clear of truck loading boom when folding it.

20. Review safety instructions with all operators annually.

SAFETY PRECAUTIONS

SAFETY DECAL LOCATIONS

Decals with "CAUTION", " DANGER", "WARNING", and other information appear on your machine for your safety. Read the information carefully and replace the decals that are no longer legible.

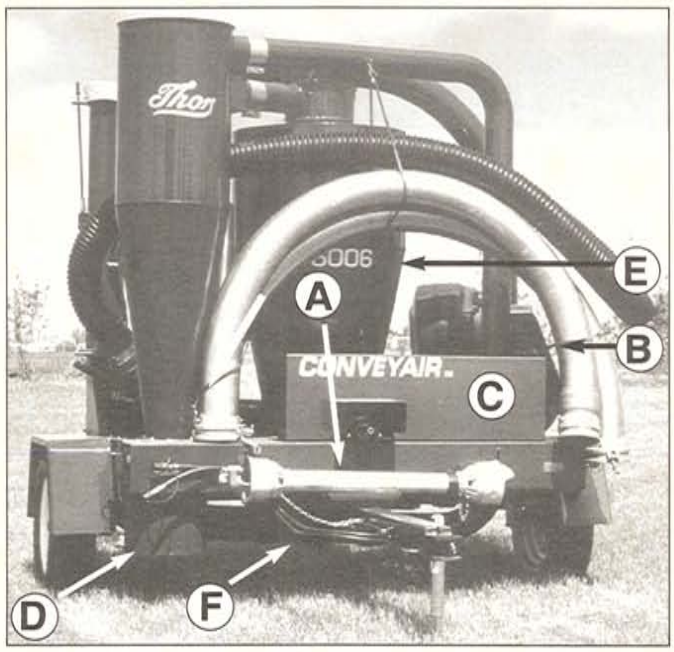

DANGER

ROTATING DRIVELINE HAZARD

To prevent serious injury or death from rotating driveline:

- Keep all guards in place when operating.
- Operate only at 1000 RPM.
- Keep hands, feet, hair and clothing away from moving parts.

SW105

Shield & Shaft " A"

CAUTION

- **Read and understand the Operator's Manual before starting and operating.**
- **Never operate the machine inside a closed building.**
- **Install and secure all shields before operating.**
- **Clear the area of people, especially small children, and the machine of foreign objects before using.**
- **Keep hands, feet, clothing and hair away from moving parts and inlet nozzle.**
- **Place all controls in neutral, stop engine, remove key and wait for all moving parts to stop before servicing, lubricating, adjusting or unplugging.**
- **Watch for overhead electrical wires and obstructions. Electrocution can occur without direct contact.**
- **Never operate machine with hydraulic leaks.**
- **Secure hitch, fasten safety chain and connect lights before transporting.**
- **Wear suitable ear protection for prolonged exposure to excessive noise.**
- **Chock wheels and block hitch before operating.**
- **Review safety items with all operators annually.**

68.040

DANGER

ELECTROCUTION HAZARD

To prevent serious injury from electrocution: Stay away from overhead electrical wires when operating the discharge boom. Electrocution can occur without direct contact.

68 056

Control Panel "B"

WARNING

ROTATING PART HAZARD

To prevent serious injury or death from rotating parts:

1. Close and secure guard before operating.

2. Shut-off engine and wait for moving parts to stop before opening to adjust, service, lubricate or unplug.

3. Keep hands, feet, clothing and hair away from moving parts.

Guard "C"

CAUTION

EMPTY DUST CANISTER FREQUENTLY AS PER OPERATORS MANUAL

Dust Canister "D"

Dust Canister "D"

WARNING

ROTATING AIRLOCK HAZARD

To prevent serious injury or death from airlock blades:

1. Do not place hands in tank when airlock is turning.

2. Shut-off engine and wait for moving parts to stop before opening door to adjust, service or unplug.

Receiver Tank "E"

WARNING

ROTATING AIRLOCK HAZARD

To prevent serious injury or death from airlock blades:

1. Do not place hands in tank when airlock is turning.

2. Shut-off engine and wait for moving parts to stop before opening door to adjust, service or unplug.

Back Frame "F"

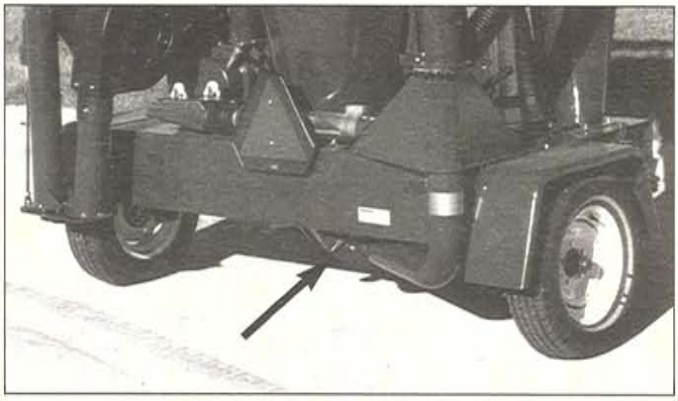

"F" Airlock behind frame

WARNING

Do not place intake tube near feet when standing on top of grain. Sufficient material can be removed to draw the operator and intake tube into the grain. Submersion in grain can cause suffocation.

Bin Nozzle "G"

Bin Nozzle "G"

TRANSPORT

The conveyair grain vac is designed to be easily moved from location to location. When transporting, follow this procedure:

TRANSPORT SAFETY

1. Make sure you are in compliance with all local regulations regarding transporting equipment on public roads and highways.
2. Make sure the SMV(Slow Moving Vehicle) emblem and all the lights and reflectors that are required by the local highway and transport authorities are in place, are clean and can be seen clearly by all overtaking and oncoming traffic.
3. Do not allow anyone to ride on the gain vac or tractor during transport.
4. Do not exceed 32 km/h (20 mph). Reduce speed on rough roads and surfaces.
5. Use a retainer on the drawbar pin and install a safety chain before transporting.
6. Always use hazard flashers on the tractor when transporting.
7. Stay away from overhead electrical wires. Electrocution can occur without direct contact.

8. When using a ball and socket, make sure the locking jaws are pinned securely in position.

9. Make sure all components and accessories are retracted and securely stowed before moving.

Speed VS Weight Ratio

Road Speed	Weight of fully equipped or loaded implement(s) relative to weight of towing machine.
Up to 32 km/h (20 mph)	1 to 1, or less
Up to 16 km/h (10 mph)	2 to1, or less
Do not tow	More than 2 to 1

EQUIPMENT MATCHING

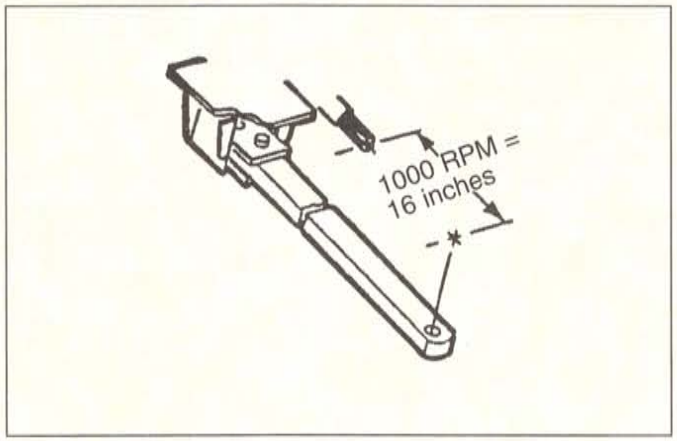

Drawbar

To provide sufficient clearance for turning and to allow telescoping of the shaft, leave 16" between the end of the shaft and drawbar pin-hole centre. Consult your tractor manual for the drawbar adjustment procedure.

Tractor Horsepower (PTO RPM -1000)

Model	Minimum Horsepower
5005	80
6006	110

PTO Shaft

1000 RPM - 21 Spline. 1 3/8" dia.

Attach PTO shield safety chain to hitch.

To prevent operating at the wrong RPM Do Not use a shaft adapter on the tractor shaft .
Use extra care when using a tractor with a shiftable PTO speed.

Hydraulic System

The power unit must have dual remote hydraulic outlets to operate the airlock motor and the boom lift circuit. The system must deliver at least 6 gpm (23 lpm) @ 1800 PSI.

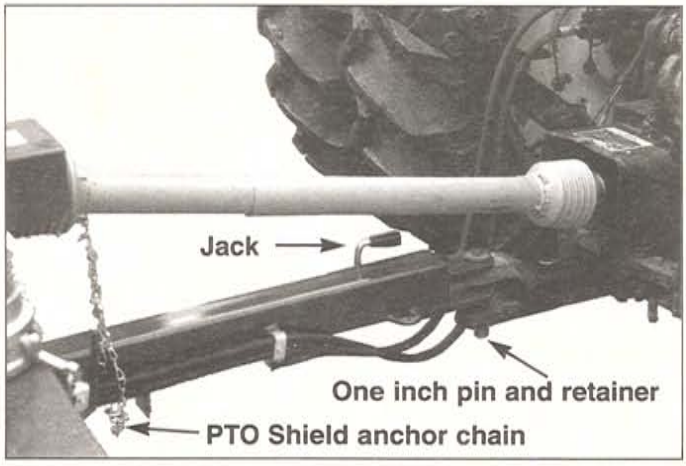

ATTACHING TRACTOR

Drawbar

1. Clear area of bystanders.

2. Use the jack on the hitch to adjust the height of the hitch to the drawbar.

3. Slowly back up to the machine and align the drawbar with the hitch.

4. Place all controls in neutral, stop tractor engine, set the park brake, remove ignition key and wait for all moving parts to stop before dismounting.

5. Insert a 1 inch (25 mm) hardened drawbar pin and install a retainer such as a Klik pin.

6. Attach a safety chain between tractor and Grain Vac.

GETTING READY

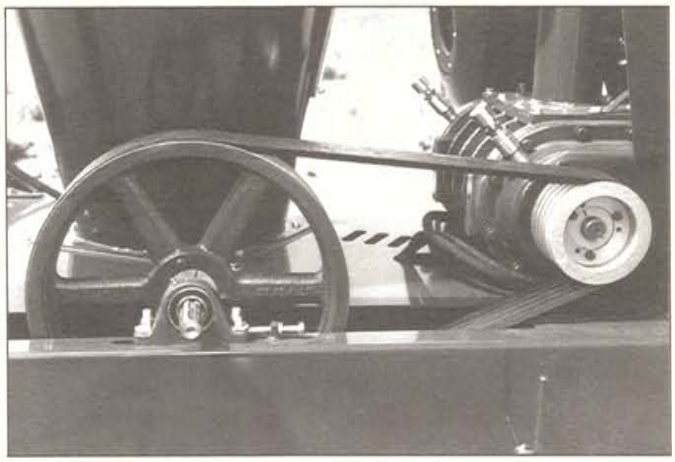

7. Open the belt cover and rotate the large pulley by hand to be sure the air pump turns freely.

Machine is shown with guard open for illustrative purposes only! Do not operate the machine with guard open.

Attach PTO shaft

1. Clean splined yokes on the driveshaft.

2. Check that the driveshaft telescopes easily and that the shield turns freely on the shaft. Lubricate or clean before attaching if it does not move freely.

3. Pull back locking collar on the yoke and slide the yoke over the splined shaft of the large pulley. Rotate the pulley by hand as needed to align the splines of the yoke and the shaft.

4. Be sure the locking pin clicks into its locking groove on the shaft.

5. Attach the shield anchor chain to the frame.

6. **Close and secure the belt cover.**

Attach hydraulic lines

1. Clean hydraulic couplers and male tips. (Thor factory supplied male tips are Standard 150 Tips).

2. Route the hydraulic hoses along the hitch and away from moving parts. Secure in position with clips or ties. (Be sure hoses are not pinched or crimped).

Controls

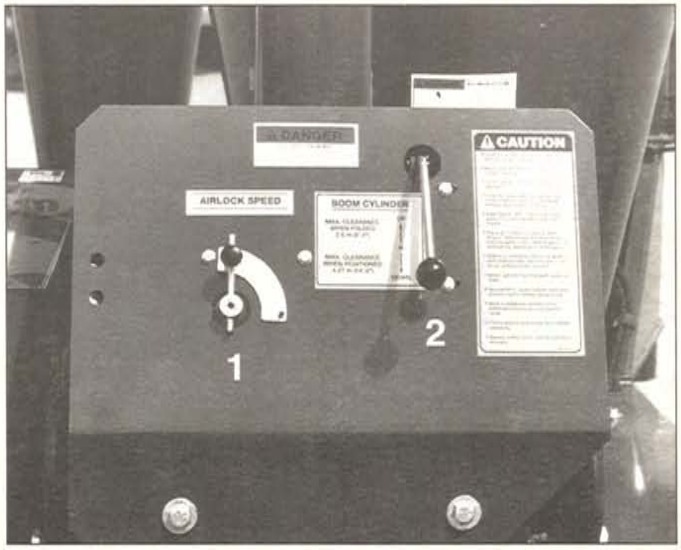

Hydraulic controls are located on the control panel on the left hand side of the machine.
1.Airlock Speed. 2.Hydraulic boom control.
Note: Optional airlock control valve is located on reverse side of panel.

We suggest you thoroughly familiarize yourself with the function of each control before regular operation.

Oil Level

Check the oil level in the blower reservoir. Add oil as required.

Position Boom

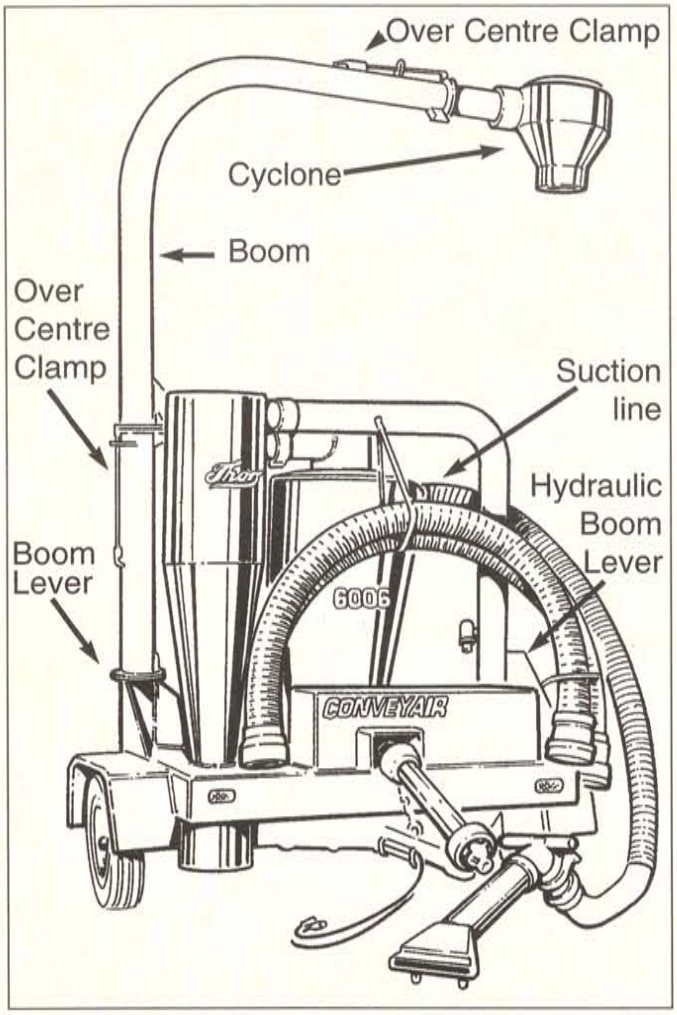

Boom Swivel

Boom Swivel

1. Set the park brake and run the tractor at low idle engine RPM. Place all controls in neutral. Place chocks ahead and behind rear tires to prevent machine movement when operating.

2. Use the control lever in the cab to engage the remote hydraulic circuit.

3. Unlatch boom transport clamp, flip up the boom lock, and swing boom back until it clears the transport step.

All bystanders should stay well clear of boom when raising or lowering it!!

DANGER

Stay at least 15 feet (5 m) away from overhead power lines when moving the boom. Electrocution can occur without direct contact.

4. Use hydraulic boom lever (Up to raise, down to lower). Carefully raise boom high enough to allow cyclone assembly (at end of boom) to swivel into position.

5. Secure cyclone into position, using over-center clamp.

6. Now lift boom all the way into working position.

7. Secure boom with Over Centre Clamp.

NOTE: Close Boom Hydraulic Lock!

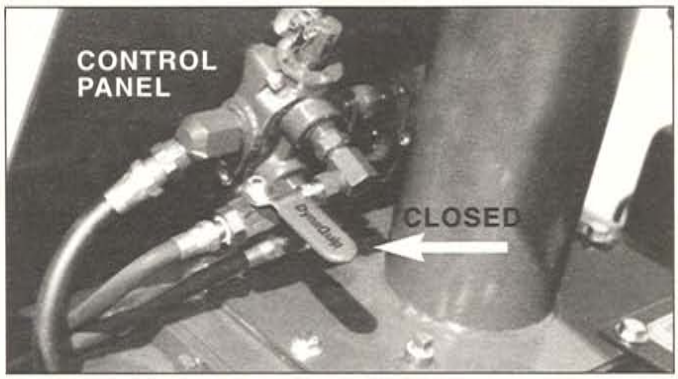

8. When boom is fully up and locked, close ball valve at rear of control panel as shown above.

9. Attach suction line to the receiver tank intake coupler. Close camlock couplers.

10. Flip transport step up during operation of Conveyair.

GETTING READY

Airlock Rotation

Do not run the airlock in the reverse direction. Damage may occur to the hydraulic motor.

Check the rotation of the airlock. Coupler should turn as indicated by arrow.

If airlock rotates in wrong direction, stop and reverse direction of control lever on the tractor, or shut down the hydraulic system and reverse the order of the hoses plugged into the tractor couplers.

For Best Performance

1. Working area should be reasonably level and dry.

2. The tractor should be positioned to have the driveline angles at a minimum.

3. The Conveyair should be located so the intake line is as straight and as short as possible.

4. When using the Conveyair to load trucks, make sure there is adequate room for the receiving vehicle to get under the discharge cyclone.

Breaking In

Your machine has been operated for a short time at the factory to assure good performance. It can however not be considered broken in. It normally takes 5 to 10 hours of operation for all parts to be polished by the grain stream and for the machine to come up to full capacity.

We recommend the following checks during the break in period:

A. After operating for 1/2 hour -

1. Check for overheated bearing. Lubricate or adjust as required*.

2. Check for oil leaks. Tighten or replace part and oil as required*

WARNING

High pressure fluids can penetrate the skin and cause infection and toxic reaction.

3. Retorque all hardware - Wheel bolts and fasteners.

4. Check belt tension and adjust as required*.

5. Check the oil levels in the blower reservoirs. If low, add oil as required. Check for leaks and correct if problem persists*.

** Check maintenance section for proper procedures.* ***(Also see page 27 for hydraulic safety)***

B. After operating for 2 to 10 hours -

1. Perform the same checks and inspections as done at 1/2 hour.

2. After the 10 hour inspection, go to normal service and maintenance procedures.

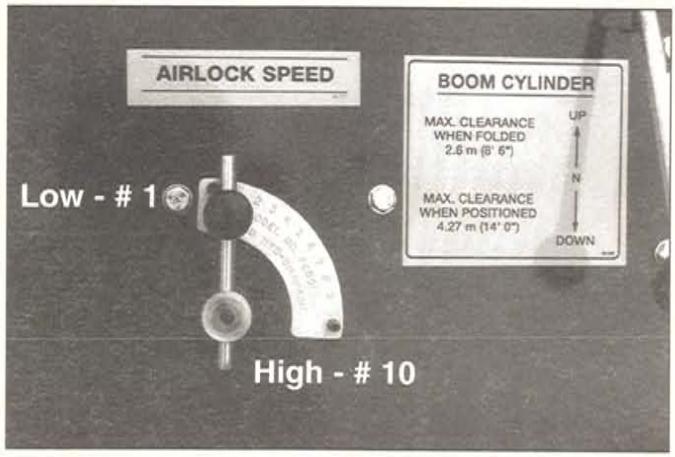

1. Set Airlock Speed

For maximum performance adjust speed most suitable for material moved.

Material	Airlock Speed (RPM)
Barley	50 - 60
Canola	45 - 60
Corn	45 - 60
Flax	35 - 55
Wheat	45 - 60
Oats	45 - 60

Material consistency varies widely in the field. Airlock speed is also affected by suction and discharge length. To obtain maximum performance, try different airlock speed, using above guide.

A rule of thumb is the larger and heavier the kernel, the faster the airlock should turn.

Tip - with light oats, or other light grains, slow PTO speed down to 900 to 950 RPM.

Adjusting Speed

Using a stop watch, the airlock can be set by counting the number of turns the yellow coupler makes. Coupler is visible through the three slots in the deck of the machine. One turn per second equals 60 RPM.

Adjust airlock RPM by moving the airlock speed lever on your control panel towards # 10 to increase speed, toward # 1 to slow down. Move lever slowly, a small movement will make a significant change in airlock speed.

OPERATION

SHORT DISTANCE TRANSFER

Insert bin nozzle.

Connect hose from receiver intake to bin nozzle. Set the air slide on the full bin nozzle all the way open and push the nozzle into the material to be moved.

Do not cover airslide with grain

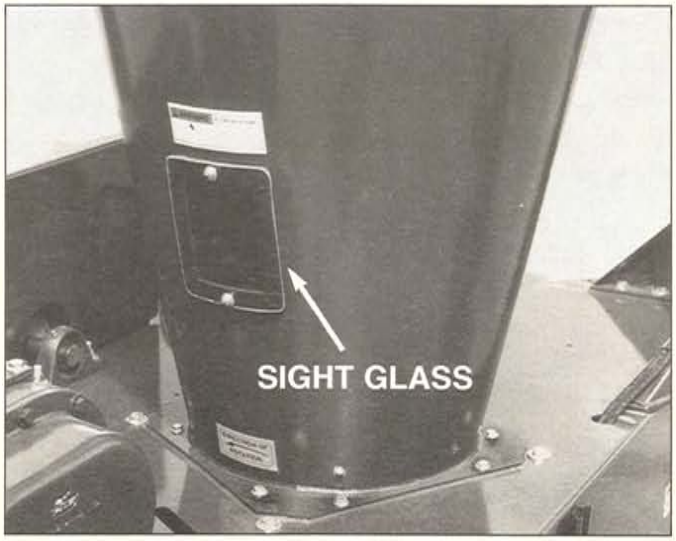

The line of the grain can be horizontal, angled or vertical depending on conditions.

Adjust the airslide on the full bin nozzle so that the material moves across the **sight glass window** of the receiver tank to approximately half way (no more than 2/3) up the window. If the machine starts to surge, slowly open slide till surging stops.

Note: Should the material stop moving and completely cover the sight glass window in the receiver tank, the machine will quickly plug. IMMEDIATELY open the air slide fully, on the full bin nozzle, to allow the machine to clear itself.

IMPORTANT

If the machine still does not clear itself do the following:

a. **Stop machine** and remove dust pail. This will allow any grain in the Blower Protection Cyclone to run out.

b. Start the machine and allow the Receiver tank to empty itself.

b. Remove the top on the Blower Protection Cyclone and clean out any material in the top of the cyclone and in the pipe between the receiver tank and the Blower Protection Cyclone.

c. Replace the Dust pail and the Top on the Blower Protection Cyclone.

d. Start machine, (RECHECK AIRLOCK SPEED , page 15) and reset the air slide as per start up instructions.

Note: Airlock should not turn faster than 65 RPM or slower than 30 RPM.

LONG DISTANCE BLOWING

WARNING

Do not use P.V.C. or other plastic tubing for long distance application. The build-up of static electricity could lead to an explosion.

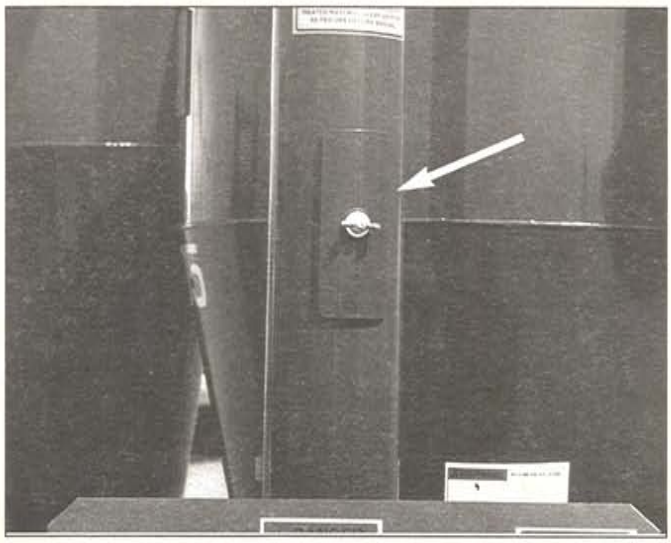

Auxiliary airslide. Located on the airline between the receiver tank and the air pump.

If discharge length is more than 40 ft. (12 m) or if blower gets too hot to the touch, open the airslide approximately 1/4" - 1/2" (6 - 12mm) for every 100 ft. (30 m) discharge. Open further if blower still gets hot.

Opening the airslide too far will affect capacity as adversely as not opening it at all.

PUSH (BLOWING) ONLY

For pushing (blowing) longer distance at a much greater capacity, remove the top of the receiving tank (page 16) and auger the material directly into the opening.

LONG DISTANCE SUCTION

For sucking grain more than thirty feet, use straight piping where possible!

Remember: The straighter the suction line the greater the capacity of the Conveyair.

CLEAN UP

When machine need not be at full capacity, e.g..when cleaning bins, the tractor can be throttled down.

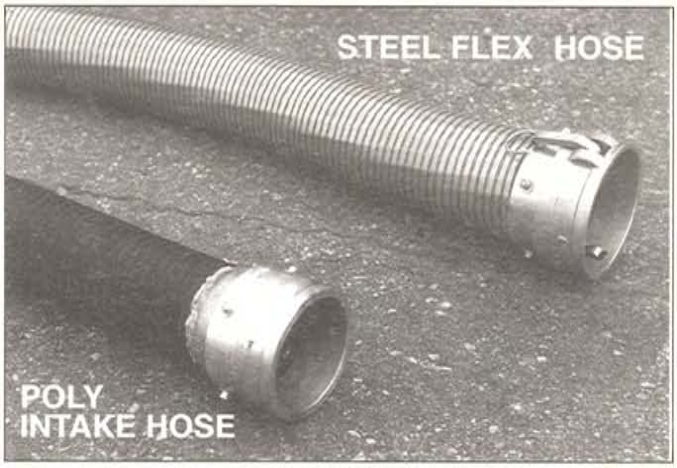

The rougher walls of the steel flex hose and the poly intake hose provide more resistance than smooth pipe. Capacity may be lowered by 20 to 40% compared to straight piping.

Use Poly hose for clean up only.

Do not dent, stretch or overbend steel flex line excessively.

Do not store poly hose in sunshine, avoid sharp obstructions that could cut or puncture the hose.

For regular cleanup use a combination of steel flex line, straight piping and poly hose. This will give you the needed flexibility to easily get into corners and around obstructions without sacrificing too much capacity.

SEED DRILL CLEAN OUT

When using the seed drill clean out kit, operate the tractor at idle only to reduce suction air flow. The receiver tank can be used as a holding tank by stopping the airlock until the seed can be discharged into a truck or storage.

CLEAN UP OF SPILLS AND GROUND STORED GRAIN

Extreme caution should be exercised when cleaning spills or grain stored on dirt. Sand and dirt may cause excessive wear to blower, and life expectancy of the unit can be reduced significantly.

FILLING BINS AND TEMPORARY STORAGE

Rear discharge option required.

When discharging into bins, remove the airlock discharge elbow and couple the machine to stationary or movable piping.

For best performance, review recommended installation schematics. Use Thor parts to insure good sealing and maximum performance.

Contact your dealer for more information.

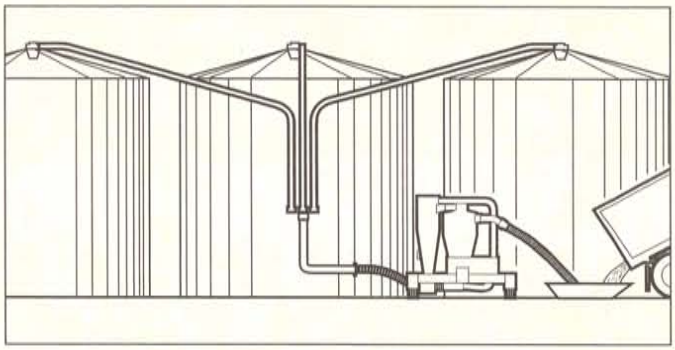

Multiple Bins (Parallel)

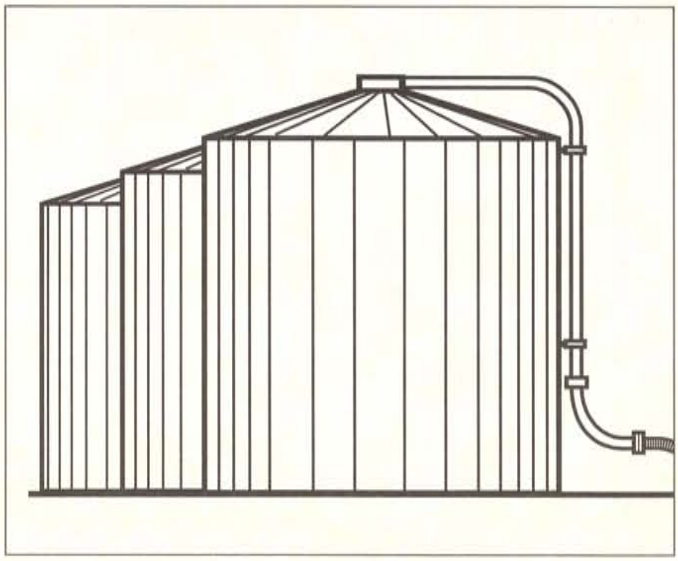

Multiple bins (Series)

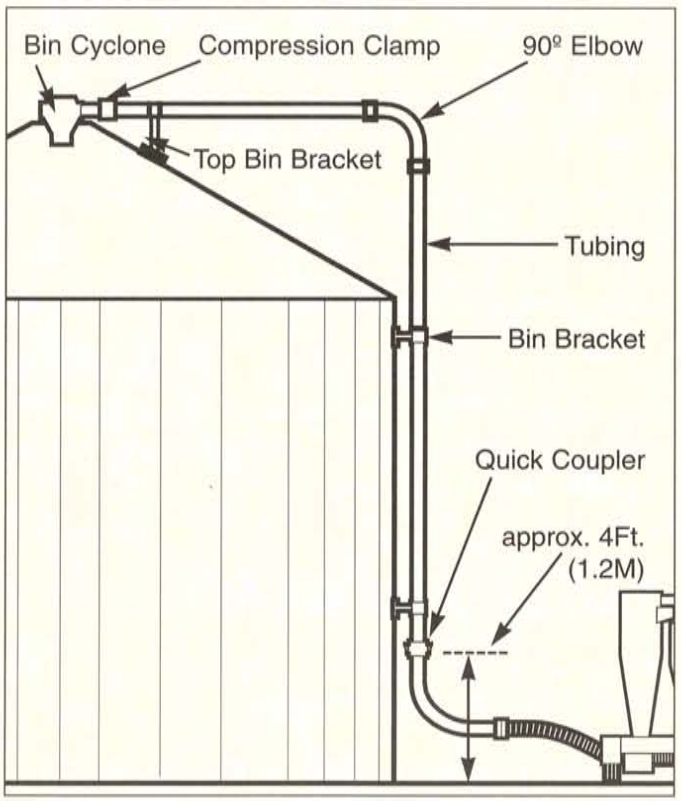

Bin Fill System

ACCESSORIES

Cam Lock Coupler

Cyclone Sock for windy conditions

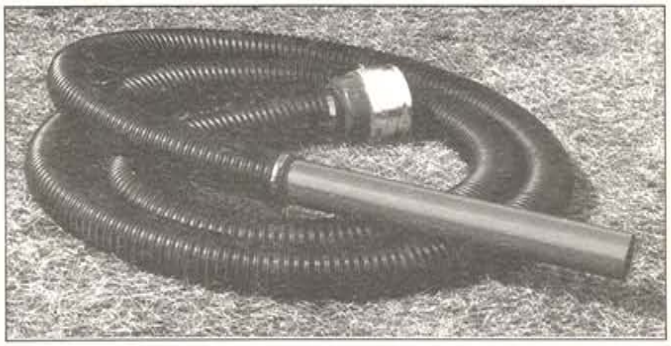

Seed Drill Clean Out Kit

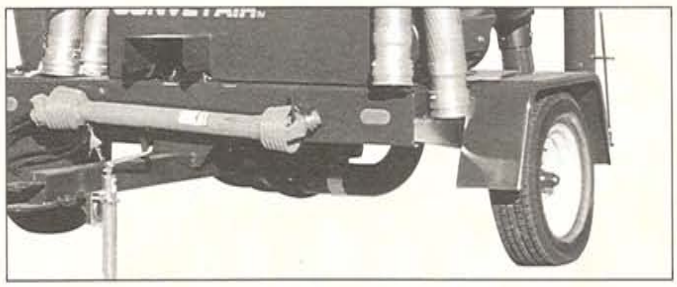

Fenders

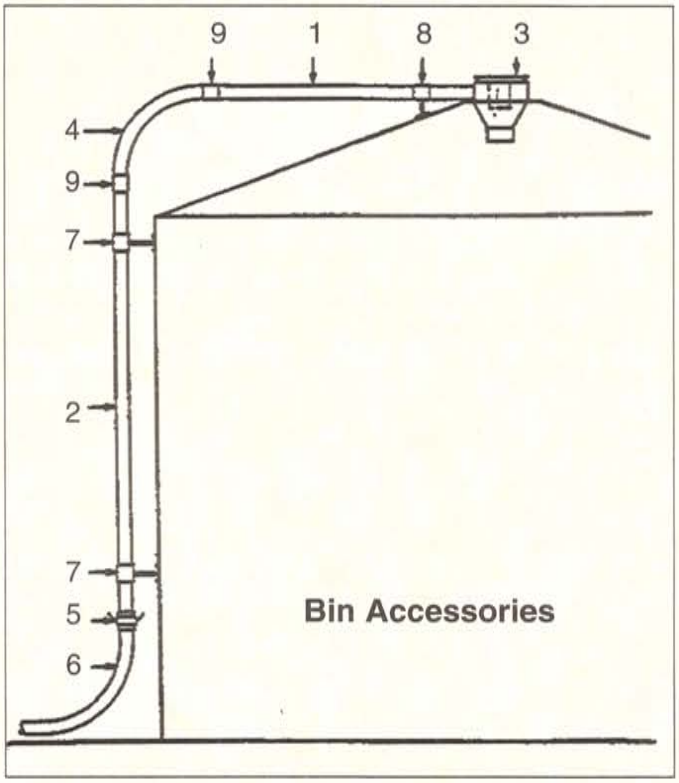

1. Horizontal Pipe Section.
Steel or aluminum. Matched to 5" or 6" Conveyair Grain Vac.

2. Vertical Pipe Section. Specs as above. Sections may be welded or coupled together with 3-bolt clamp.

3. Bin Top Cyclone. Cyclones come equipped with a rain cap and can also double as aeration vents.

For temporary installations, use the lightweight poly cyclone and attach with quick couplers.

4. 90 Degree long radius elbow. Weld in place or secure with 3-bolt clamp.

5. 5" or 6" female quick couplers.

6. Delivery line from your CONVEYAIR. Use steel flex only or a combination steel flex and long radius 90 degree elbow.

7. Side wall bin brackets.

8. Angle top mount bracket.

9. 3 Bolt clamp.

10. SEE PARTS LIST FOR STANDARD HOSE AND OTHER PARTS.

Fluids and lubricants

Grease

Use any SAE multi -purpose high temperature grease with extreme pressure (EP) performances and containing at least 1.5% molybdenum disulfide or SAE Multi-Purpose Lithium Base Grease.

Oil

Blower:
Use only 15W40 multi-grade oil equal to or exceeding SAE "SF" specifications.

Capacity - Front and Rear, 800cc (.87 qt. US)

Hydraulic Oil Reservoirs - Self Contained Hydraulics:
10W Hydraulic oil equal to or exceeding SAE "SF" specifications.
Capacity - (31 qt. US)

Cleaning agent

WD40 or equivalent.

CAUTION

1. Place all controls in neutral, stop tractor engine, set park brake, remove ignition key and wait for all moving parts to stop before servicing.

2. Before applying pressure to a hydraulic system, make sure all lines, fittings and couplers are tight and in good condition.

3. Relieve pressure from hydraulic circuit before servicing or disconnecting from tractor.

1. Use only a manual grease gun for all greasing. Air powered grease guns may damage the seal on bearings, leading to early bearing failure.

IMPORTANT

Do not over grease, it can damage bearing seals.

2. Wipe grease fitting with a clean cloth before greasing, to avoid injecting dirt and grit.

3. Replace and repair broken fittings immediately.

8 Hours or Daily

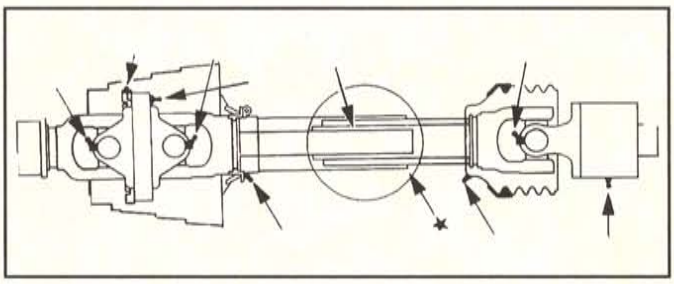

PTO SHAFT (9 Locations)

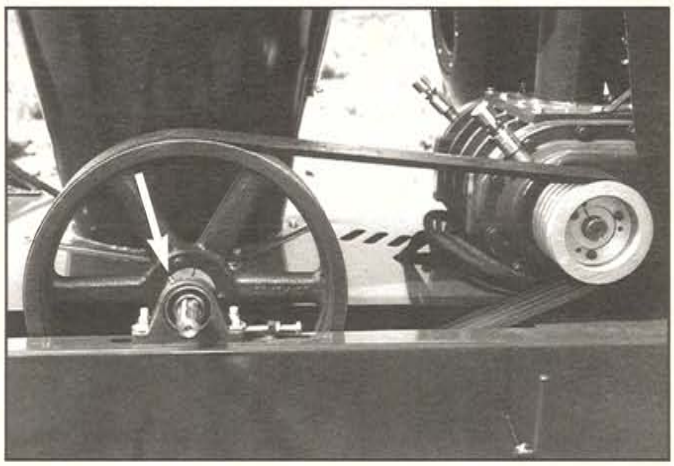

Input Pulley Shaft, front and rear

CAUTION

Machine is shown with guard open for illustrative purposes only. Do not operate machine with guard open.

8 Hours or Daily

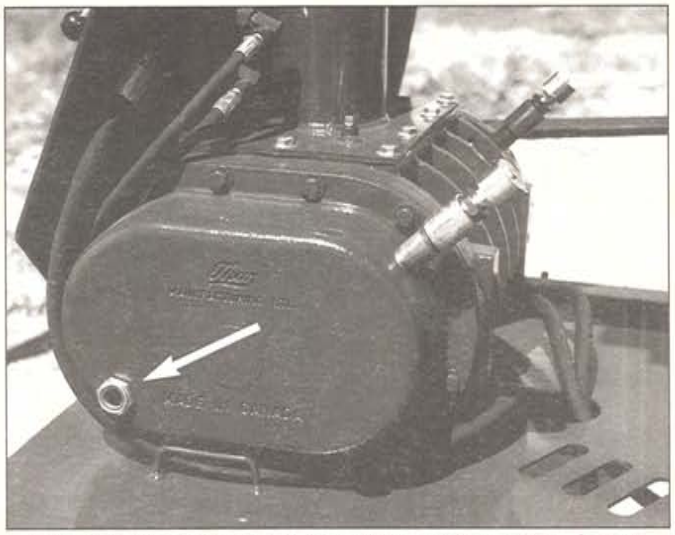

Check air pump oil level in reservoirs, front and rear (2 locations). Add as required.

NOTE

Check when the oil is cold and the machine is level .

100 Hours or 6 Months

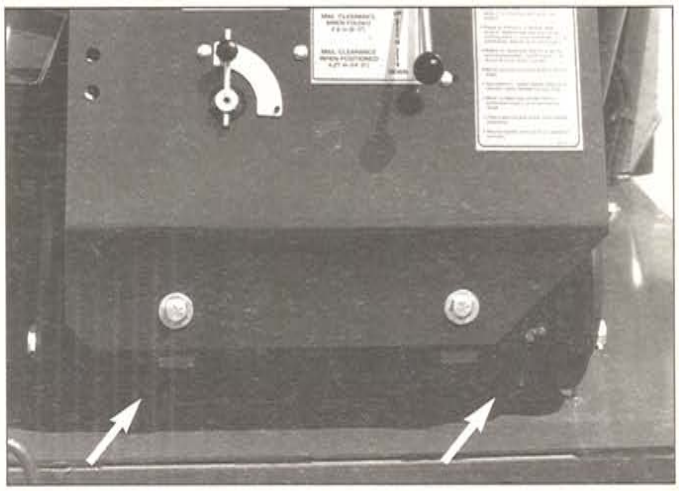

Change the oil in air pump reservoirs (front and rear) .

NOTE

Change every 30 hours if operating in very dusty conditions.

50 Hours

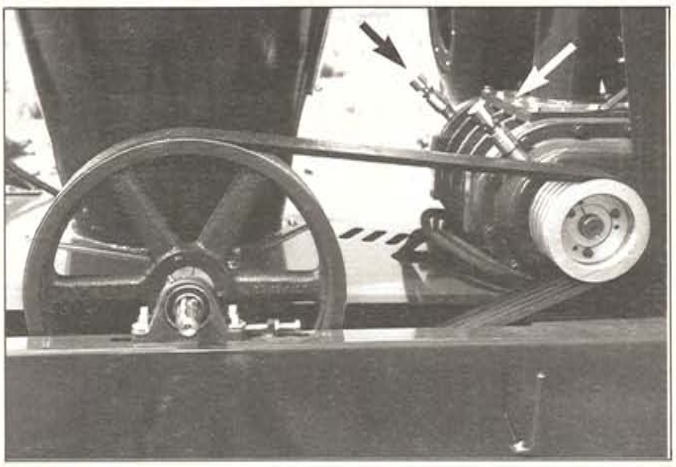

Clean oil reservoir breather caps (2 locations).

200 Hours or Annually

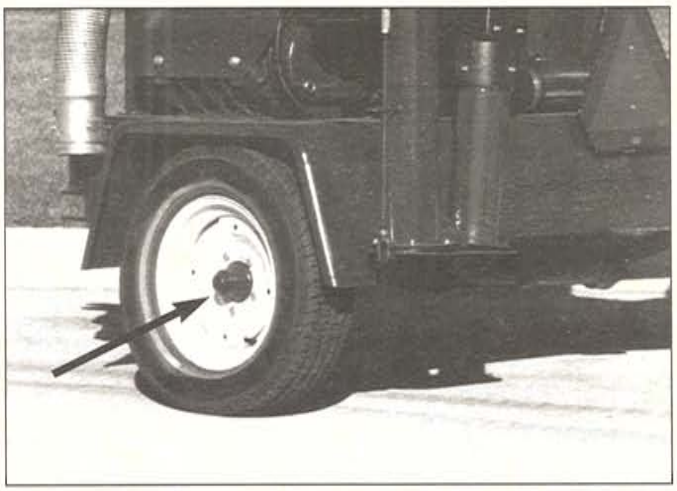

Repack wheel bearings (2 locations).

SERVICE RECORD

See Lubrication and Maintenance sections for details of service. Copy this page to continue record.

ACTION: ✔ CHECK C CHANGE CL CLEAN
L LUBRICATE R REPACK

HOURS / SERVICED BY / MAINTENANCE																		
8 Hours or Daily																		
L PTO Shaft (7)																		
L Input Pulley Shaft Front. & Rr. (2)																		
✔ V Belt Tension																		
✔ Air Pump Oil Level in Reservoir (2)																		
✔ + CL System Filter																		
50 Hours																		
CL Oil Reservoir. Breather Caps (2)																		
100 Hours or 6 Month																		
C Oil in Air Pump Reservoir Front & R																		
Annually																		
R Wheel Bearings (2)																		
CL Machine																		

V-BELT TENSION

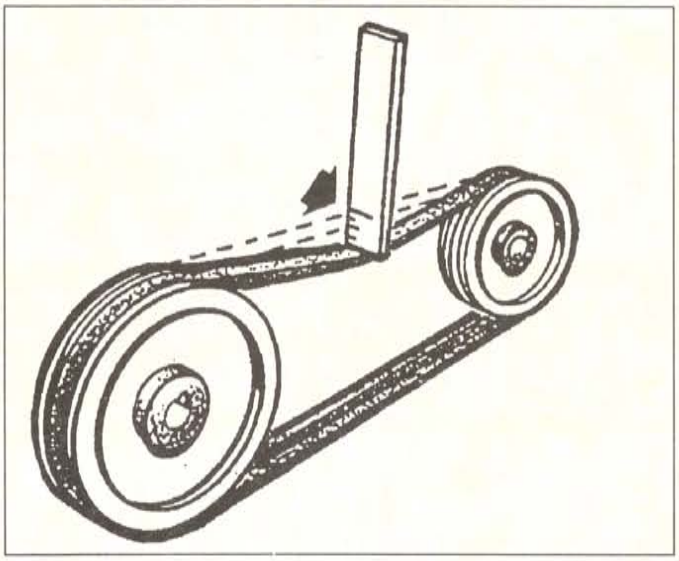

The V-belts on the input drive should always be adjusted to have approximately 1 inch (25mm) deflection in the center. If the belts are loose they will start to slip which will cause heat build up and excessive wear of the belts. It the belts are too tight they will cause the bearings to overload which will result in premature failure of the main shaft and the lower bearings.

1. Place PTO and hydraulic controls in neutral and shut-off engine. Disconnect the PTO shaft from the tractor.

2. Unlatch belt shield cover and open cover.

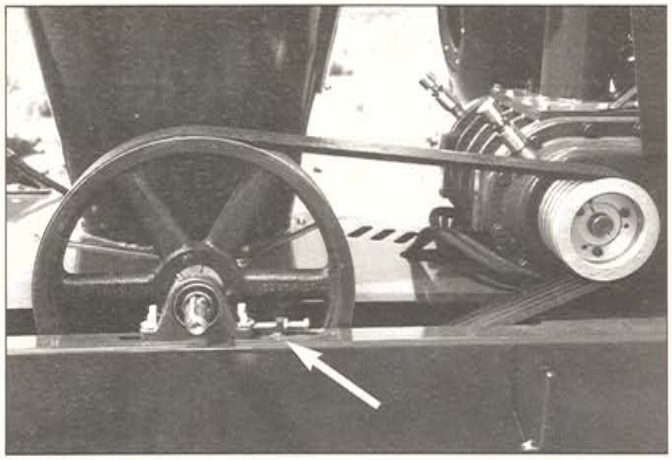

3. Loosen jam nut on adjuster bolts and loosen the bearing mounting bolts.

4. Use the adjusting bolts to move the pulley assembly to apply the proper tension to the belts and also to align the pulleys with each other.

⚠ CAUTION

Machine is shown with guard open for illustrative purposes only. Do not operate machine with guard open.

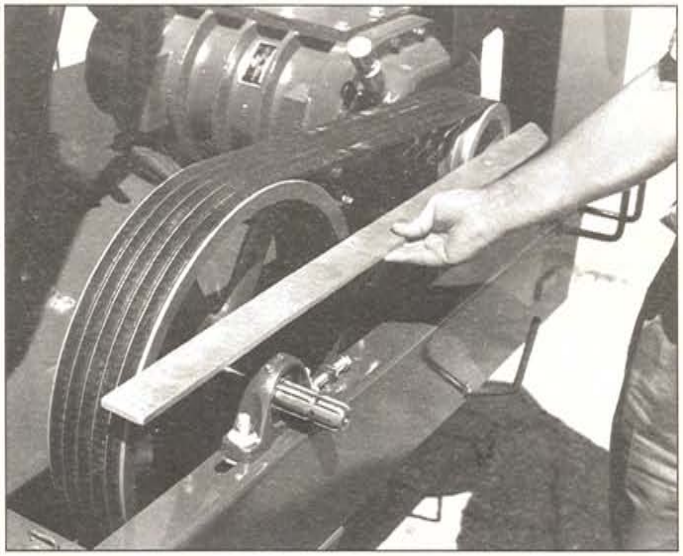

5. Place a straight edge across the faces of the two pulleys. Maximum allowable misalignment is 1/16" (2mm) on any of the pulley edges. Adjust as required.

6. Be sure the belt tension is correct.

7. Tighten the bearing mount bolts and the jam nuts.

8. Close and latch belt cover.

MAINTENANCE

AIRLOCK TIPS

Check Airlock Tips clearance when there is a noticeable drop in capacity of the Conveyair.

If clearance exceeds 0.38 mm (0.015") adjust as shown below.

a. Checking clearance:

Disengage PTO and hydraulic power and shut off engine. Wait for all moving parts to stop.

2. Relieve the pressure on the hydraulic lines and disconnect from tractor.

3. Remove hydraulic lines from the airlock drive motor to allow rotation of the airlock.

⚠ CAUTION

High pressure fluids can penetrate the skin and cause infection and toxic reaction

4. Open the inspection door on the receiver tank. Use a feeler gauge to check the clearance between the tips and the shell.

b. Airlock Tip Adjustment

1. Remove the connector on the air line between the BPS and the receiver tank.

2. Attach an overhead hoist to the receiver tank.

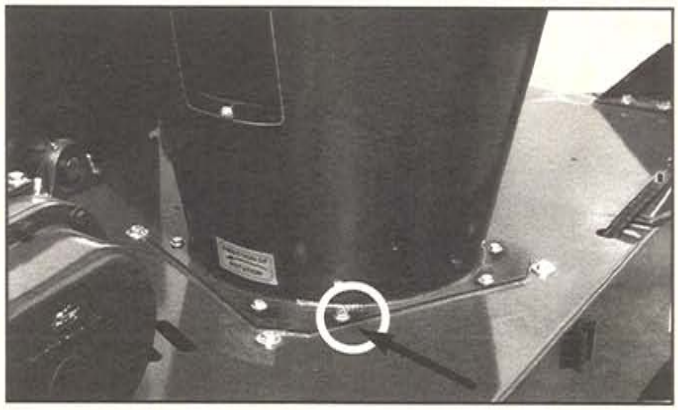

3. Remove the eight bolts securing the receiver tank to the airlock mount plate. Remove the receiver tank from the frame.

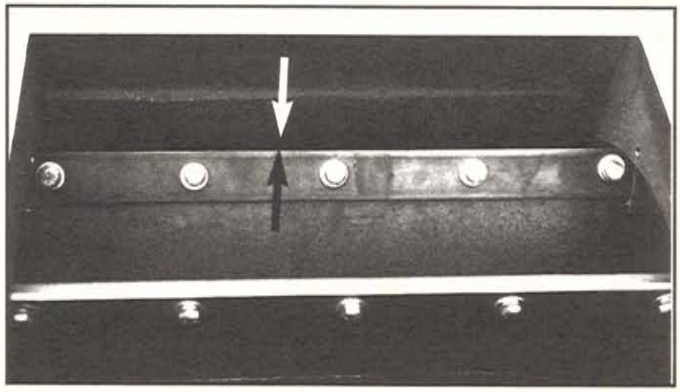

⚠ WARNING

ROTATING AIRLOCK HAZARD
To prevent serious injury or death from airlock blades:
1. Do not place hands in tank when airlock is turning.
2. Shut-off engine and wait for moving parts to stop before opening door to adjust, service or unplug.

4. Position tip next to top of shell.

5. Loosen the 5 bolts attaching the tip to the blade of the airlock slightly.

6. Move the tip until you have 0.006" (0.15 mm) clearance between tip end and shell.

7. Tighten the bolts and torque to 34-40 Nm (20-25 ft. lbs.)

8. Rotate the rotor to ensure that there is no contact between the tip and the shell. Adjust if there is contact.

9. Mark the tip with a felt pen as done and proceed with remaining tips till all have been adjusted.

10. Replace receiver tank and check that all connections are airtight.

RESERVOIR BREATHER
(Clean every 50 hours)

Clean breathers allow the pressure in the oil reservoir to equalize with the outside as the temperature changes.

1. Remove breather from the top of the reservoirs.

2. Soak/Wash in a good grade of solvent.

3. Dry with an airhose and re-install.

AIR PUMP OIL RESERVOIR
(Change oil every 100 hours, more often if conditions are very dusty).

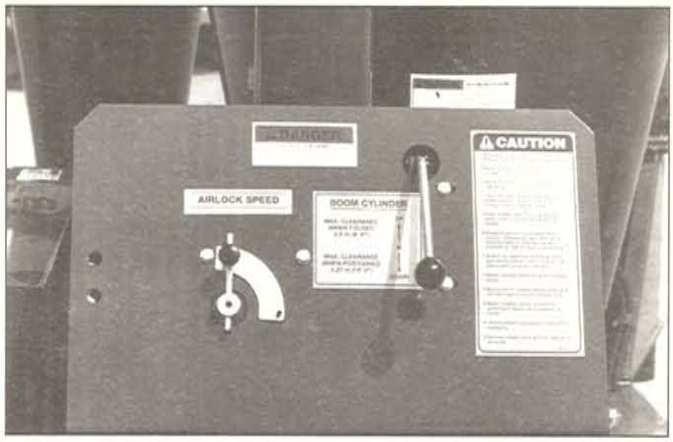

1. Place small pan under the drain plug and remove plug. Drain for 10 minutes.

2. Re-install and tighten the drain plug.

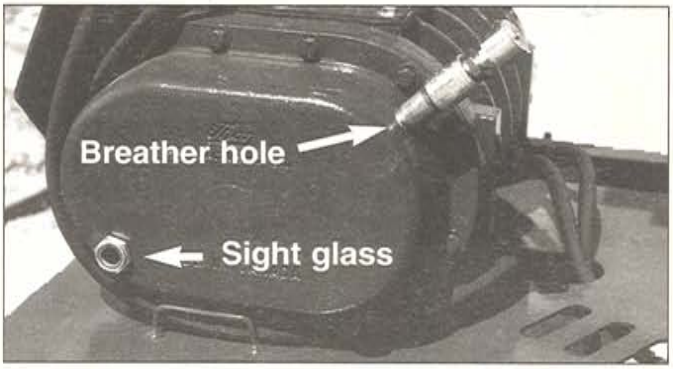

3. Remove breather and add oil through the breather hole. **Fill to center of the sight glass** and re-install breather.

IMPORTANT
- **Overfilling causes heating from the oil churning.**
- **Underfilling causes heating from lack of lubrication.**

4. Repeat on other reservoir.

MAINTENANCE

BPS
(Blower Protection System)

The air which is sucked from the receiver tank and drawn toward the air-pump contains dust which is harmful to the pump. This dust is trapped by the BPS system and collected in the dust canister. The amount of dust collected depends on the amount of dust and fines in the grain being moved.

Remove and empty dust canister regularly. Do not allow to overfill, three quarters full should be considered full!

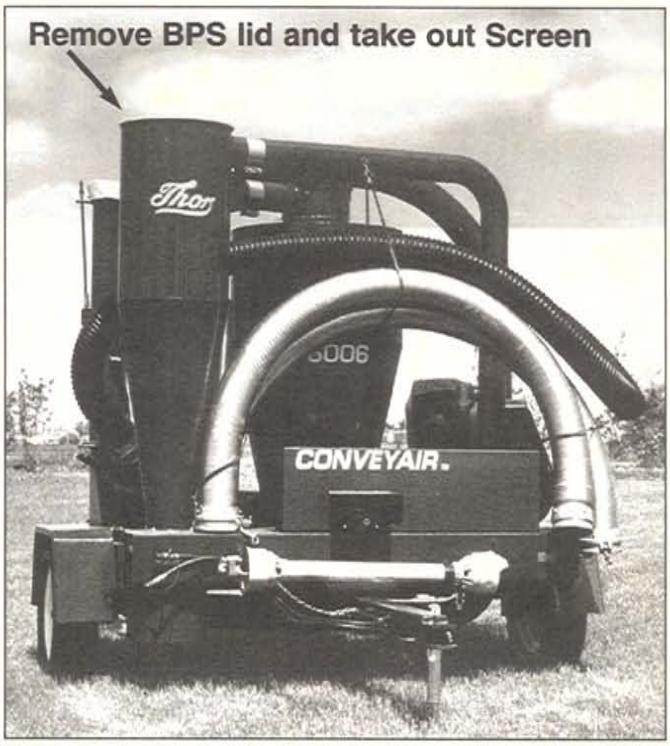

NOTE

If machine is allowed to overfill (plug) -

a. Remove screen on top of BPS and clean if required and reinstall.

> DO NOT strike the screen with any hard object as damage to the screen will diminish its effectiveness.

b. Empty canister and also allow any grain which may have accumulated in BPS to run out.

Refer to unplugging instructions under OPERATION on page 16.

SHEAR PIN

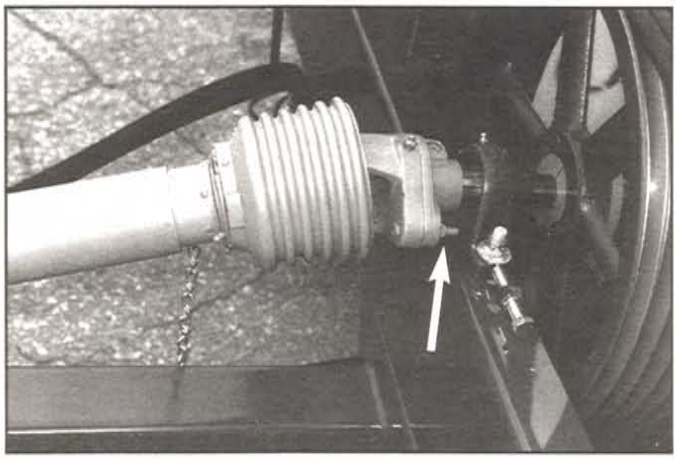

A shear pin is provided in the PTO shaft to protect the drive system during an overload.

Changing the Shear Pin

1. Place all controls in neutral, stop engine, set park brake, remove ignition key and wait for all moving parts to stop before dismounting.

2. Disconnect the PTO shaft from the tractor and lay to the side to provide maximum clearance for the shear bolt.

3. Carefully remove remaining shear bolt using a hammer and punch if necessary. Do not enlarge the holes.

4. Install the new shear bolt and tighten.

IMPORTANT

These shear bolts are specially designed to provide protection for the drive system. Do not install just any bolt, use genuine Thor parts.

HYDRAULIC SAFETY

1. Make sure that all components in the hydraulic system are kept in good condition.

2. Replace any worn, cut, abraded, flattened or crimped hoses and metal lines.

3. Before applying pressure to the system, make sure all components are tight and that lines, hoses and couplings are not damaged.

Do not use tape, clamps or cement to repair hydraulic lines. The hydraulic system operates under high pressure, creating a hazardous unsafe condition when such repairs fail suddenly.

4. Wear proper hand and eye protection when searching for a high pressure hydraulic leak. Use a piece of wood or cardboard as a backstop instead of hands to isolate and identify leak.

5. If injured by a concentrated high pressure stream of hydraulic fluid, seek attention immediately. Serious infection or toxic reaction can develop from hydraulic fluid piercing the skin surface.

WARNING

High pressure fluids can penetrate the skin and cause infection and toxic reaction.

BOLT TORQUE

Check tightness of bolts periodically, using bolt torque chart as a guide. Always replace hardware with the same strength bolt.

English Torque Specifications

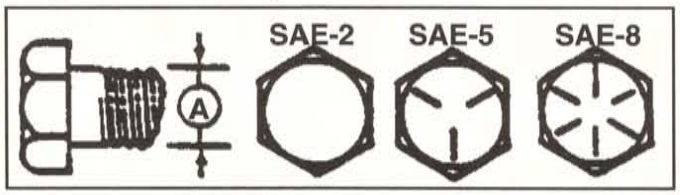

Bolt Dia. "A"	Bolt Torque* SAE 2 N.m	(lb-ft)	SAE 5 N.m	(lb-ft)	SAE 8 N.m	(lb-ft)
1/4"	8	(6)	12	(9)	17	(12)
5/16"	13	(10)	25	(19)	36	(27)
3/8"	27	(20)	45	(33)	63	(45)
7/16"	41	(30)	72	(53)	100	(75)
1/2"	61	(45)	110	(80)	155	(115)
9/16"	95	(70)	155	(115)	220	(165)
5/8"	128	(95)	215	(160)	305	(220)
3/4"	225	(165)	390	(290)	540	(400)
7/8"	230	(170)	570	(420)	880	(650)
1"	345	(225)	850	(630)	1320	(920)

Metric Torque Specifications

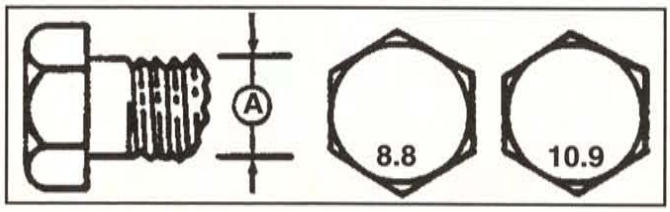

Bolt Diameter "A"	Bolt Torque* 8.8 N.m	(lb-ft)	10.9 N.m	(lb-ft)
M3	.5	(.4)	1.8	(1.3)
M4	3	(2.2)	4.5	(3.3)
M5	6	(4)	9	(7)
M6	10	(7)	15	(11)
M8	25	(18)	35	(26)
M10	50	(37)	70	(52)
M12	90	(66)	125	(92)
M14	140	(103)	200	(148)
M15	225	(166)	310	(228)
M20	435	(321)	610	(450)
M24	750	(553)	1050	(774)

* Torque value for bolts and capscrews are identified by their head markings.

Torque values indicated above are valid for non-greased or non oiled threads and heads unless otherwise specified. Do not grease or oil bolts or capscrews unless otherwise specified in this manual. When using locking elements, increase torque values by 5%.

HYDRAULIC FITTING TORQUE

Tighten Flare Tube Fittings*

1. Check flare and flare seat for defects that might cause leakage.

2. Align tube with fitting before tightening.

3. Lubricate connection and hand tighten swivel nut.

4. To prevent twisting the tube(s), use two wrenches. Place one wrench on the connector body and with the second tighten the swivel nut to the torque shown.

Tube Size OD in.	Nut size Across Flats in.	Torque Value* N.m	(lb-ft)	Recommended Turns to Tighten (After finger Tightening) Flats	Turns
3/16	7/16	8	(6)	1	1/6
1/4	9/16	12	(9)	1	1/6
5/16	5/8	16	(12)	1	1/6
3/8	11/16	24	(18)	1	1/6
1/2	7/8	46	(34)	1	1/6
5/8	1	62	(46)	1	1/6
3/4	1 1/4	102	(75)	3/4	1/8
7/8	1 3/8	122	(90)	3/4	1/8

* The torque values shown are based on lubricated connections as in reassembly.

HYDRAULIC SCHEMATIC STANDARD

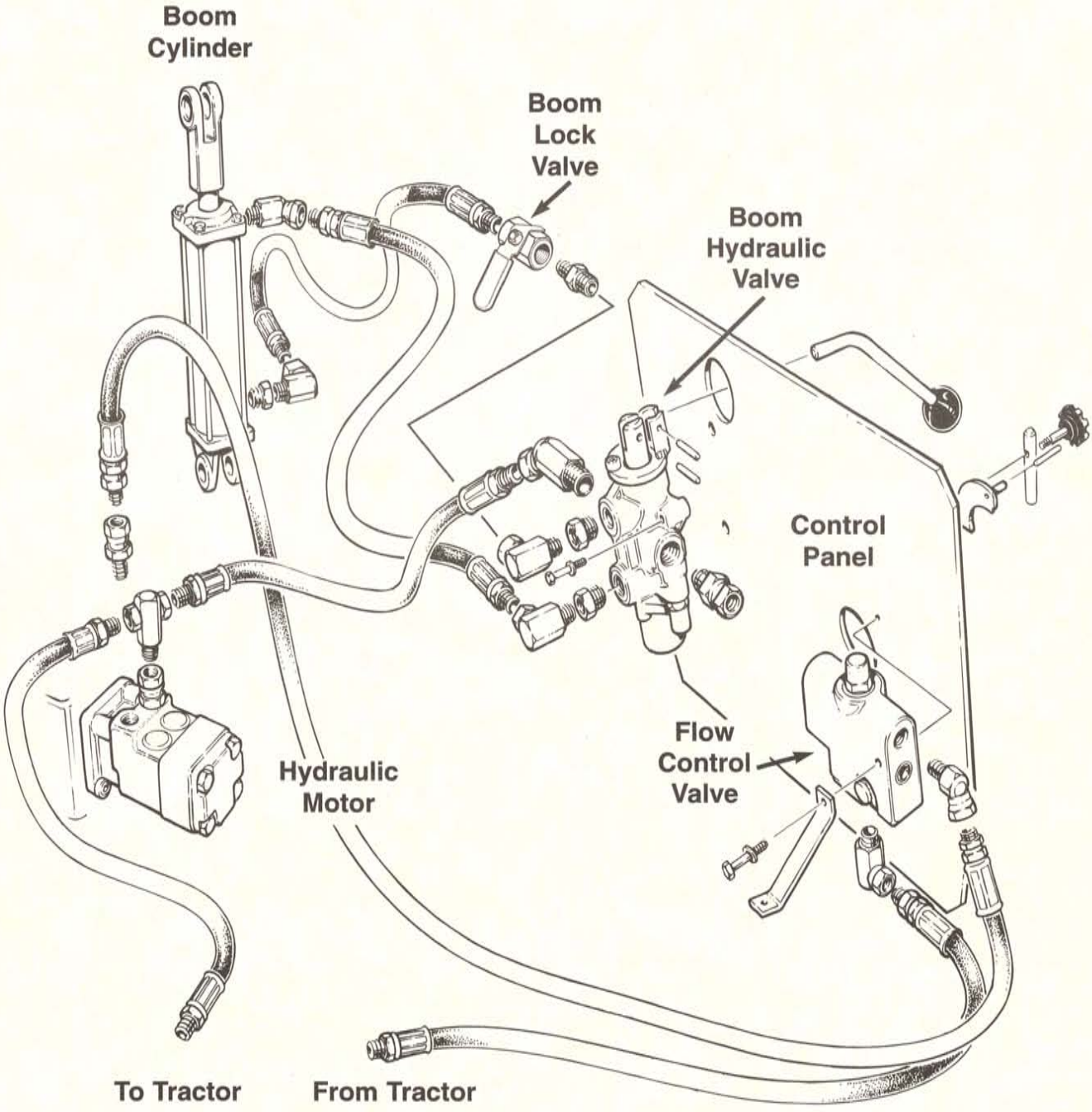

HYDRAULIC SCHEMATIC WITH REVERSE OPTIONS

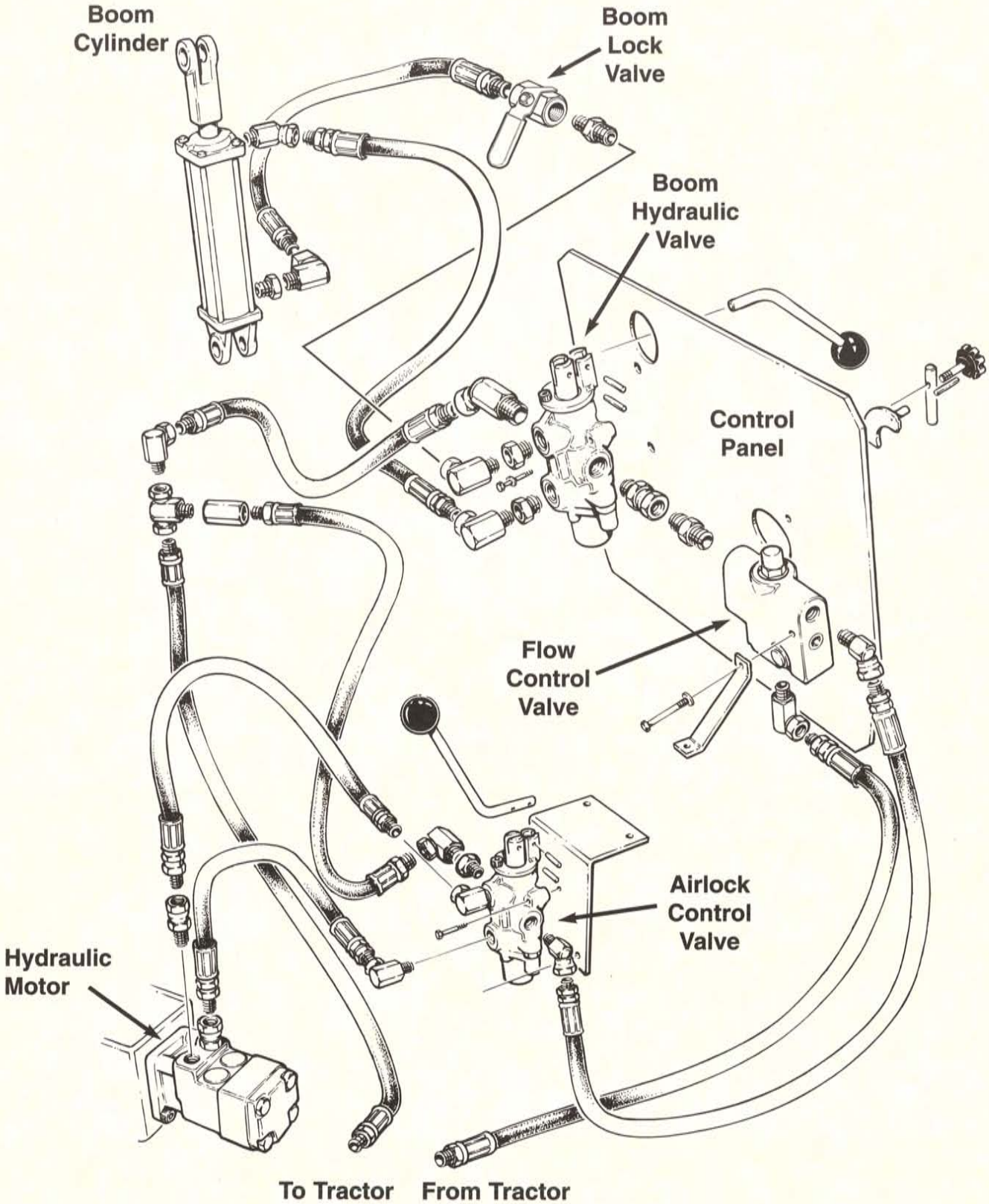

HYDRAULIC SCHEMATIC
SELF CONTAINED WITH REVERSE OPTION

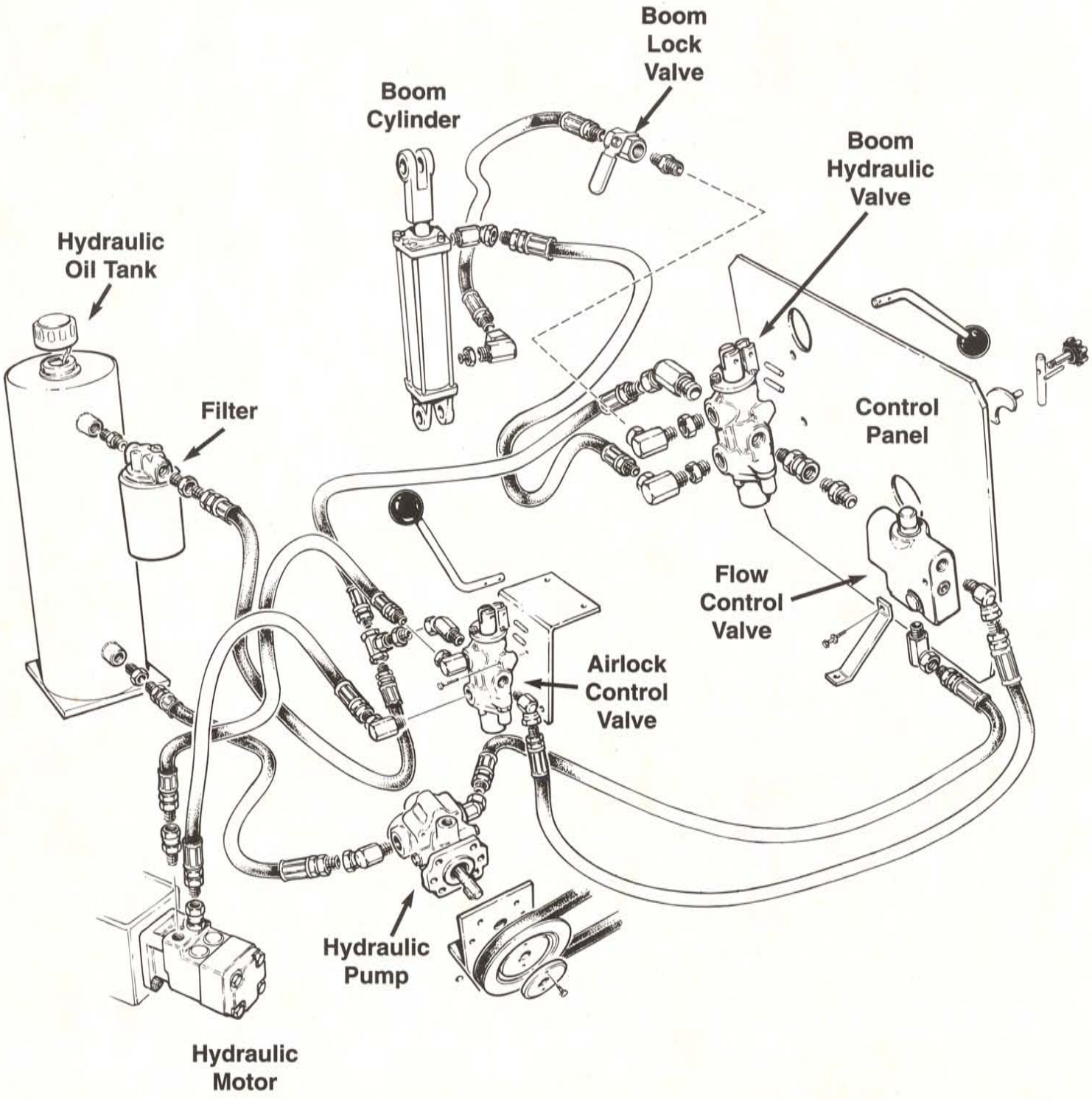

TROUBLESHOOTING

The heart of the Conveyair Grain Vac is the blower (air pump) and the air lock. Both components must be operating at their recommended speed to obtain maximum efficiency from the machine.

The blower is driven by a belt and pulley system from the PTO on a tractor. The airlock is driven by a hydraulic motor powered by the hydraulic system on the tractor or by a self contained hydraulic system.

If you encounter a problem that is difficult to solve, even after having read through this trouble shooting section, please call your local dealer or the factory. **Before you call, please have this Operators Manual and the serial numbers from your Grain Vac ready.**

In North America call
1-800-582-3944

Other parts of the world
1-204-982-8356

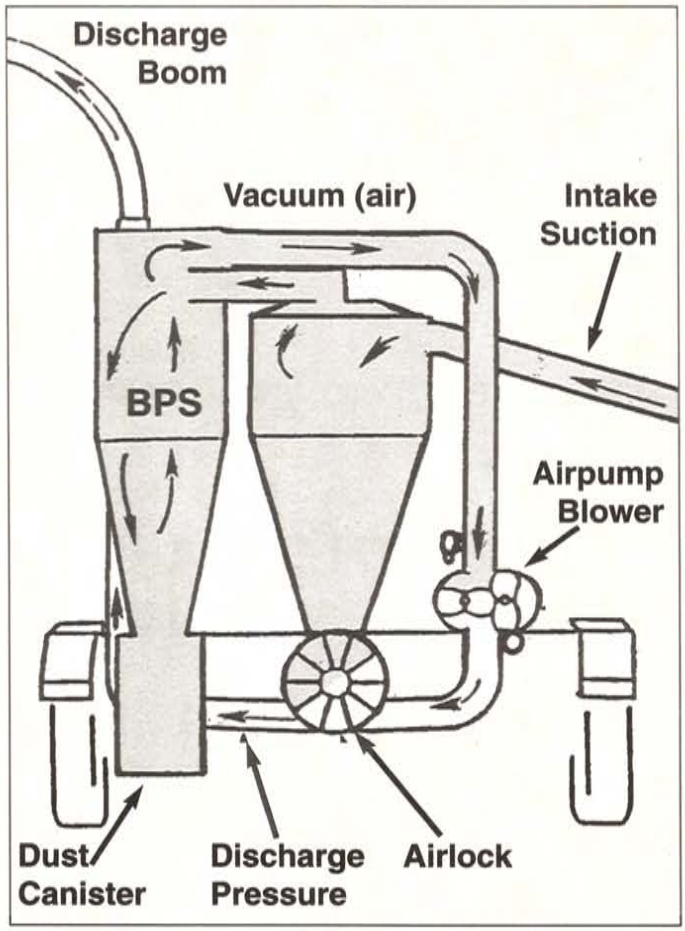

PROBLEM	CAUSE	SOLUTION
Low capacity	Tractor PTO runs slow.	Speed up tractor PTO to rated RPM for the model.
	540 Instead of 1000 RPM.	Change tractor or PTO speed shaft.
	Belts are slipping.	Tighten belts.
	Airlock runs too fast.	Slow down airlock speed until grain builds up to the level of inspection door.
	Improper air intake.	Adjust air intake.
	Improper use of nozzle.	Use full bin nozzle for larger piles and full bins. Use cleanup nozzle with flair for cleanup only. Do not submerge airslide in grain.
	Air leaks - Intake.	Check for worn coupler levers or missing coupler gaskets.
	Air leaks - Machine.	Check BPS, receiver section, and airlock gaskets.
		Check pressure and vacuum relief valve.
		Check clamps on airline between receiver tank and BPS and between BPS and blower.

TROUBLE SHOOTING

PROBLEM	CAUSE	SOLUTION
Low capacity.	Improper piping.	Keep suction lines as short as possible. Minimize bends. Use straight length of pipe wherever possible. Use the poly hose for clean up only!
	Airlock tip clearance high.	Adjust airlock tips. (See PAGE 24)
	Airlock end plate clearance.	If rotor to end plate clearance is more than 0.015" consult the dealer or factory.
Excessive grain damage.	Too much air intake.	Adjust air intake nozzle.
	PTO running too fast.	Throttle down tractor.
	Damaged tubing or flexline.	Repair or replace.
	Insufficient grain supply.	Reposition nozzle.
Pulsation	Insufficient air at intake.	Open slide until grain flow becomes even.
	Airlock turning too fast.	Adjust airlock speed until grain is at level of the inspection door.
	Improper piping.	Replace steel flex or poly hose with rigid tubing wherever possible.
	Suction line too small.	Use proper line size.
	PTO running too slow.	Increase PTO RPM.
	Belts are slipping.	Tighten belts.
	Excessive airlock tip clearance.	Adjust airlock tips.
	Airlock turning too slow.	Adjust airlock speed until grain is at the proper level on the inspection door.
	Obstruction in suction.	Shut down machine and clear line obstruction.
BPS plugs	Airlock turning too slowly.	Increase airlock speed until grain is at the proper level on the inspection window.
	Airlock turning too fast.	Decrease airlock speed until the grain is at the proper level on the inspection door.
	Airlock not turning.	Check for proper hydraulic hook-up. Check for and remove obstruction airlock.

TROUBLE SHOOTING

PROBLEM	CAUSE	SOLUTION
Airlock not turning at all.	Flow control valve wrong.	Reset flow control.
	Tractor hydraulic not properly engaged.	Reset tractor hydraulics.
	Obstruction in airlock.	Shift tractor hydraulic lever from FORWARD to REVERSE and back TO FORWARD. Repeat if obstruction does not clear up. If obstruction does not clear up, shut off tractor and grain vac, open inspection door and remove cause of obstruction.
Hydraulic oil heating up excessively.	Faulty tractor hydraulics.	Use different tractor.
	Low oil level.	Add oil.
Excessive wear on air lines.	Improper piping.	Minimize bends.
	Too much air flow.	Adjust airslides and airlock speed.
	Insufficient grain supply.	Reposition intake nozzle. Open grain supply doors.
	Excessive PTO speed.	Operate at proper recommended PTO speed.

Prior to storage we recommend that you thoroughly inspect your Conveyair.

1. Replace any worn or damaged components.

2. Wash and clean the machine. **After cleaning, run machine at low idle for 2 -3 minutes to dry the internal components.**

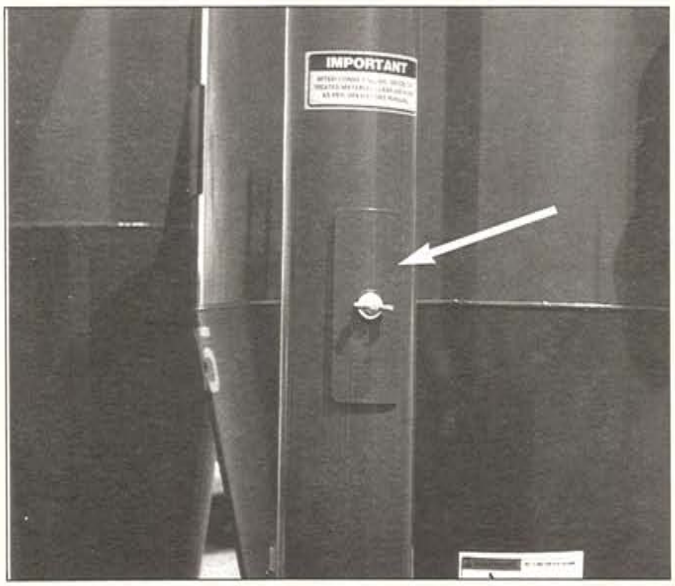

3. While machine is running, open the cleaning port and inject a cleaning agent such as WD40 for 45 - 60 seconds. This will coat the inside of the air pump to help prevent rusting.

4. Lubricate all grease points. Make sure all grease cavities have been filled with grease to remove any water residue.

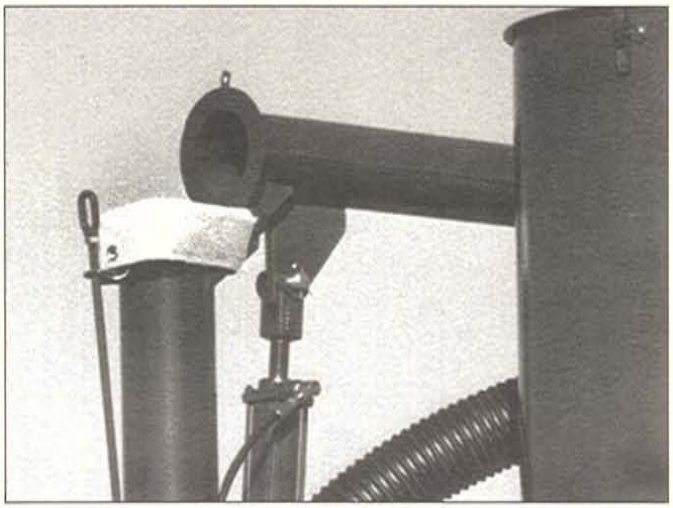

5. Retract and stow all components and accessories and install cover over the boom pivot. (Keeps out dirt and small animals).

6. Inspect all hydraulic hoses, couplers, fittings and lines. Tighten any loose fittings. Replace any hose that is badly cut, nicked, abraded or is separating from the fitting.

7. Inspect, clean or empty the BPS.

8. Check the fluid level in the air pump oil reservoirs. Add oil as required.

9. Touch up all paint nicks and scratches to help prevent rusting.

10. For storage, select an area which is dry and level. Make sure unit is firmly blocked and will not tip or sink into a soft area. Place a plank under jack for added support.

INDEX

ISSUE 19-9812
Replaces 00-9603

ASSEMBLY	PAGE NO.
FRAME & WHEEL ASSEMBLY	37
RECEIVER TANK & DUST COLLECTOR	38
AIRLOCK & BLOWER ASSEMBLIES	39
BOOM & CYCLONE	40
BELT DRIVE	41
STEEL FLEX HOSE & COUPLERS	42
CLEAN UP HOSE & COUPLERS	43
CLEAN UP & BIN NOZZLES	44
DRIVESHAFT	45 & 47
STANDARD HYDRAULIC SYSTEM	48 & 49
HYDRAULIC SYSTEM WITH REVERSE OPTION	50 & 51
SELF CONTAINED HYDRAULIC SYSTEM	52 & 53

When ordering parts specify:
model, size, serial number and ordering number

FRAME & WHEEL ASSEMBLY

ISSUE 01-9603

5" & 6"

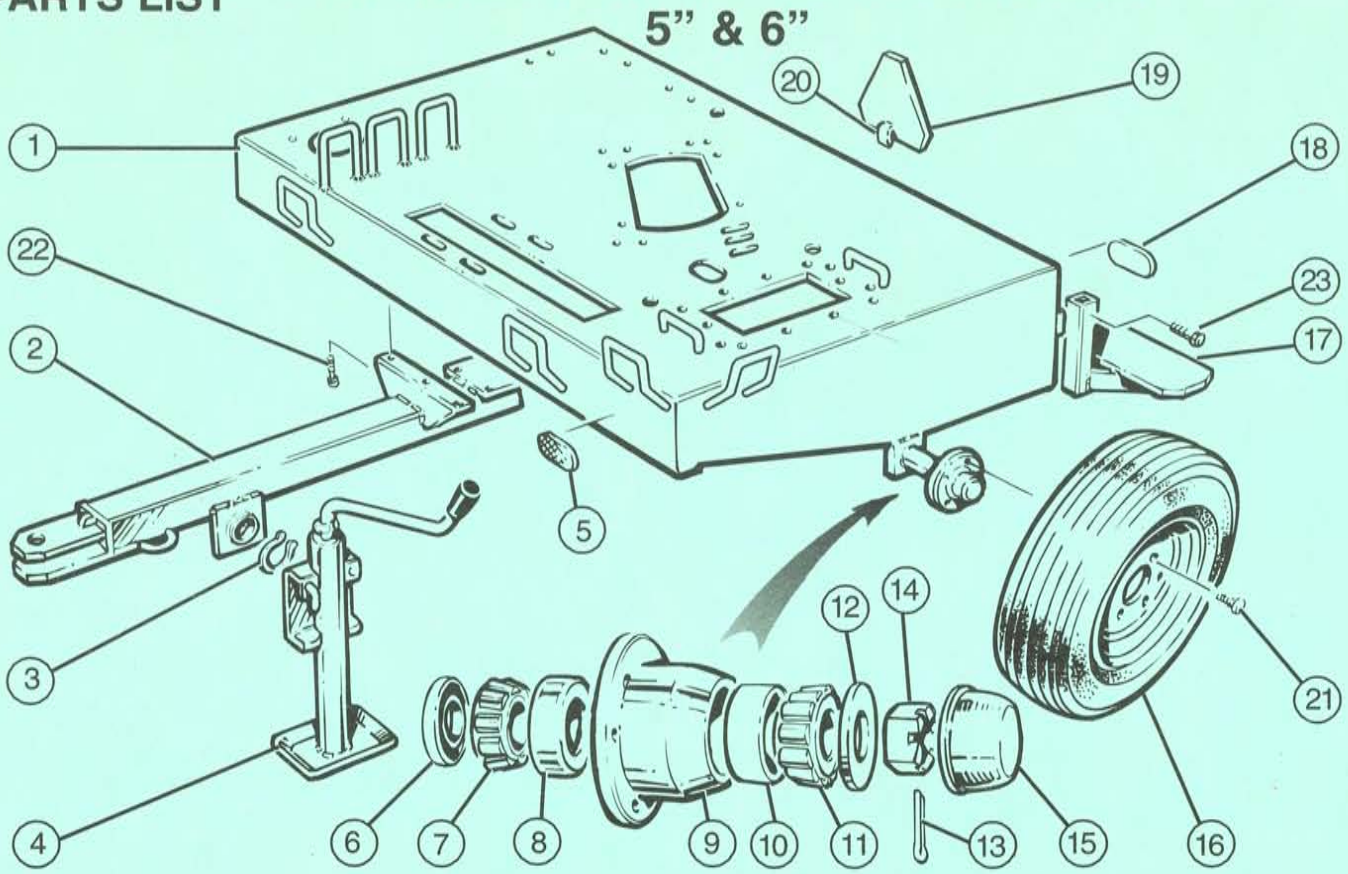

Item No.	Ordering No. 5"	Ordering No. 6"	No. Req.d	Description
1	**11600**	**11600**	1	Main frame
2	**30500**	**30500**	1	Hitch assembly
3	**30023**	**30023**	1	Snap ring
4	**30001**	**30001**	1	Jack
5	**60014**	**60014**	2	Amber reflector
6	**20024**	**20024**	2	Wheel seal
7	**20025**	**20025**	2	Bearing cone inner
8	**20026**	**20026**	2	Bearing cup inner
9	**30026**	**30026**	2	Wheel hub
10	**20027**	**20027**	2	Bearing cone outer
11	**20028**	**20028**	2	Bearing cup outer
12	**56046**	**56046**	2	Flat washer 3/4"
13	**60012**	**60012**	2	Cotter key
14	**30027**	**30027**	2	Castle nut
15	**30029**	**30029**	2	Dust cap
16	**30512**	**30512**	2	Tire/rim assembly, P205 x 15
17	**11540**	**11620**	1	Boom support
18	**60015**	**60015**	2	Red reflector
19	**68503**	**68503**	1	Slow Moving Vehicle sign
20	**11529**	**11529**	1	Slow Moving Vehicle spade 112409
21	**30028**	**30028**	10	Wheel bolt
22	-	-	7	3/8" x 1 1/4" Gap screw, flat washer & lock nut
23	-	-	6	1/2" x 3" Gap screw, flat washer & lock nut

Thor Manufacturing Ltd.

When ordering parts specify:
model, size, serial number and ordering number

ISSUE 02-9812
Replaces 01 -9710

RECEIVER TANK & DUST COLLECTOR

REPAIR PARTS LIST

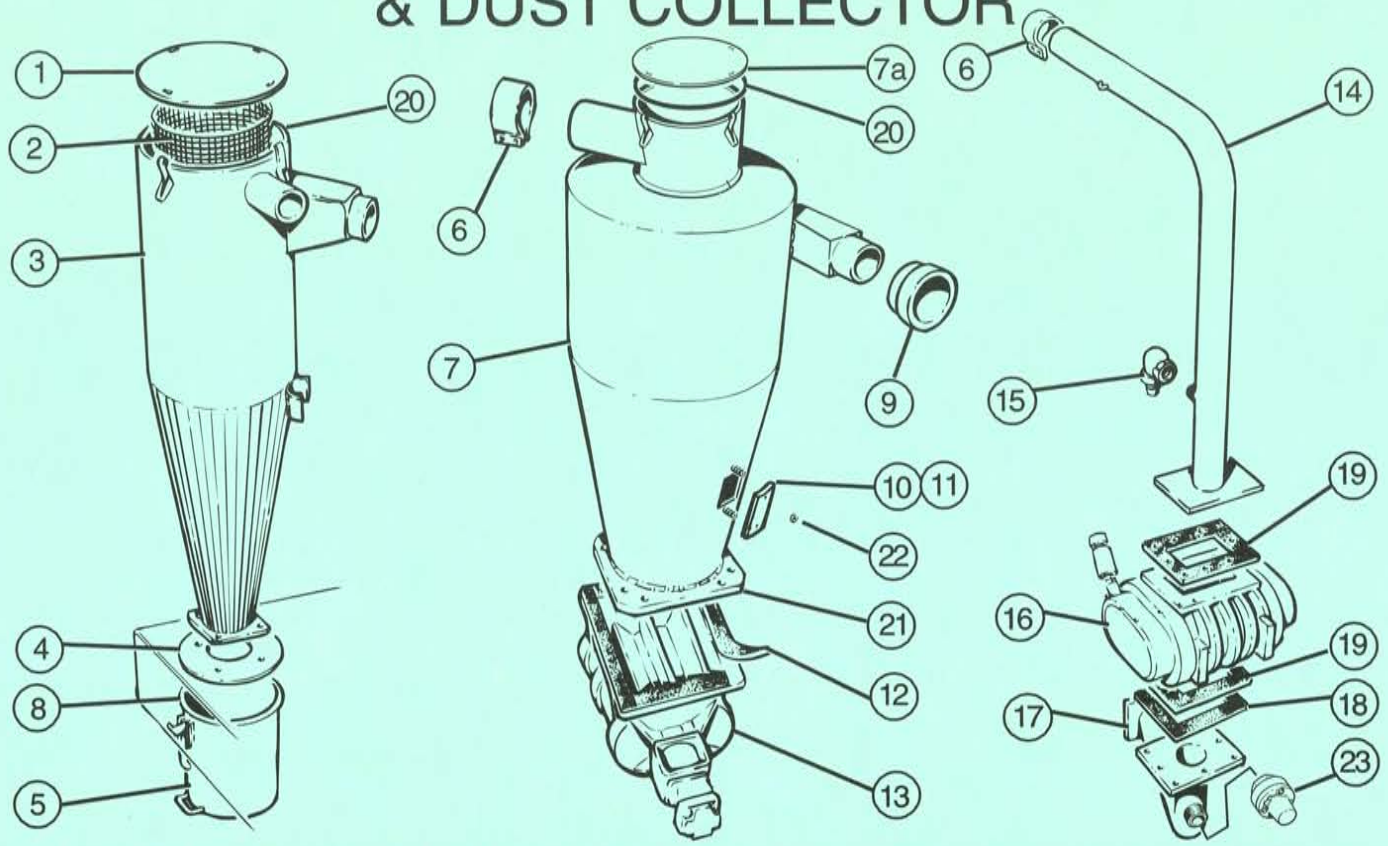

Item No	Ordering No. 5"	Ordering No. 6"	No. Req'd	Description
1	**19504**	**19504**	1	Dust cyclone top plate
2	**19514**	**19514**	1	Screen, anti-plugging
3	**19500**	**19500**	1	Dust cyclone
4	**15525**	**15525**	1	Ring, pail seal
5	**19512**	**19512**	1	Dust cyclone pail
6	**26011**	**26011**	2	5" Seal clamp
7	**15623**	**15624**	1	Receiver tank
7a	**15632**	**15632**	1	Receiver tank top plate
8	**64505**	**64505**	1	Pail gasket, C52 Channel -30 inches
9	**26007**	**26052**	1	Female coupler
10	**64503**	**64503**	1	Foam gasket - 28 inches
11	**15520**	**15520**	1	Window receiver
12	**64504**	**64504**	1	Foam gasket - 70 inches
13	**10525**	**10625**	1	Airlock - **see page 39**
14	**45505**	**45505**	1	Airline blower inlet
15	**26119**	**26119**	1	Vacuum relief valve
16	**14400**	**14400**	1	Blower complete with Oil filter - **see page 39**
17	**45630**	**45630**	1	2 Piece airline blower output - **see page 39**
18	**64030**	**64030**	1	Gasket Blower, 5.3 1/8
19	**64501**	**64501**	2	Blower Gasket, 1/16 rubber
20	**64500**	**64500**	-	Rubber channel, 1/4 x 3/8
21	**64503**	**64503**	1	Foam gasket, 60 inches
22	-	-	2	1/4" Flat washer & lock nut
23	**26013**	**26013**	1	Pressure Relief Valve

When ordering parts specify:
model, size, serial number and ordering number

Thor Manufacturing Ltd.

AIRLOCK & BLOWER ASSEMBLIES

ISSUE 03-9710
Replaces 03-9603

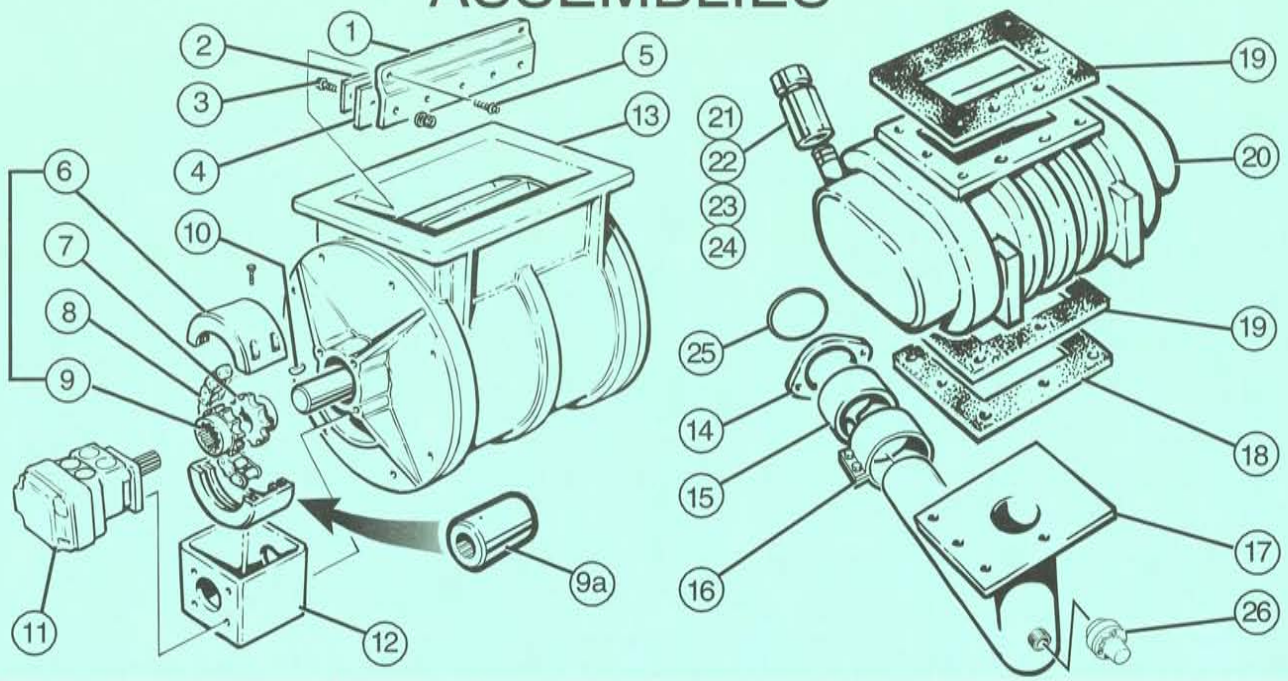

Item No	Ordering No. 5"	Ordering No. 6"	No. Req.d	Description
0	**10525**	**10625**	**1**	**AIRLOCK ASSEMBLY, COMPLETE WITH MOTOR**
1	**10630**	**10630**	1	Wiper
2	**10631**	**10631**	1	Retainer wiper
3	**-**	**-**	3	Bolt, 1/4" x 1 1/2" complete with flat/L washer & nut
4	**10632**	**10632**	1	Flex tip wiper
5	**-**	**-**	2	Bolt, 1/4" x 1 1/2" complete with flat/L washer & nut
6	**20011**	**20011**	1	Chain coupler cover (to mid 1997)
7	**20007**	**20007**	1	Chain coupler sprocket (to mid 1997)
8	**20010**	**20010**	1	Chain - chain coupler (to mid 1997)
9	**10021**	**10021**	1	Chain coupler sprocket - splined (to mid 1997)
9A	**10513**	**10513**	1	Coupler weldment **(Mid 1997 models and up)**
10	**20006**	**20006**	1	Woodruff key
11	**22228**	**22228**	1	Hydraulic motor - White
12	**10017**	**10017**	1	Bracket for mounting airlock motor
13	**10535**	**10635**	1	Airlock, less motor and coupler
00	**14400**	**14400**	**1**	**BLOWER COMPLETE WITH BREATHER VENTS**
14	**45503**	**45503**	1	Flange airlock inlet
15	**45629**		1	Extension blower output tube
15		**26044**	1	Reducer - 6" to 5"
16	**26011**	**26011**	1	Seal clamp, 5"
17	**45630**	**45630**	1	Airline output
18	**64030**	**64030**	1	Gasket, 5" x 3 1/8"
19	**64501**	**64501**	2	Gasket, 1/16" rubber
20	**14400A**	**14400A**	1	Blower less breathers
21	**22136**	**22136**	2	Galvanized steel nipple, 3/4" x 2 1/2"
22	**22044**	**22044**	2	Galvanized coupler nipple, 3/4"
23	**22149**	**22149**	2	Galvanized hexagon bushing, 3/4" x 3/8"
24	**14431**	**14431**	2	Breather vent
25	**20013**	**20013**	1	O Ring
26	**26013**	**26013**	1	Pressure Relief Valve

Thor Manufacturing Ltd.

When ordering parts specify:
model, size, serial number and ordering number

BOOM & CYCLONE

5" & 6"

REPAIR PARTS LIST

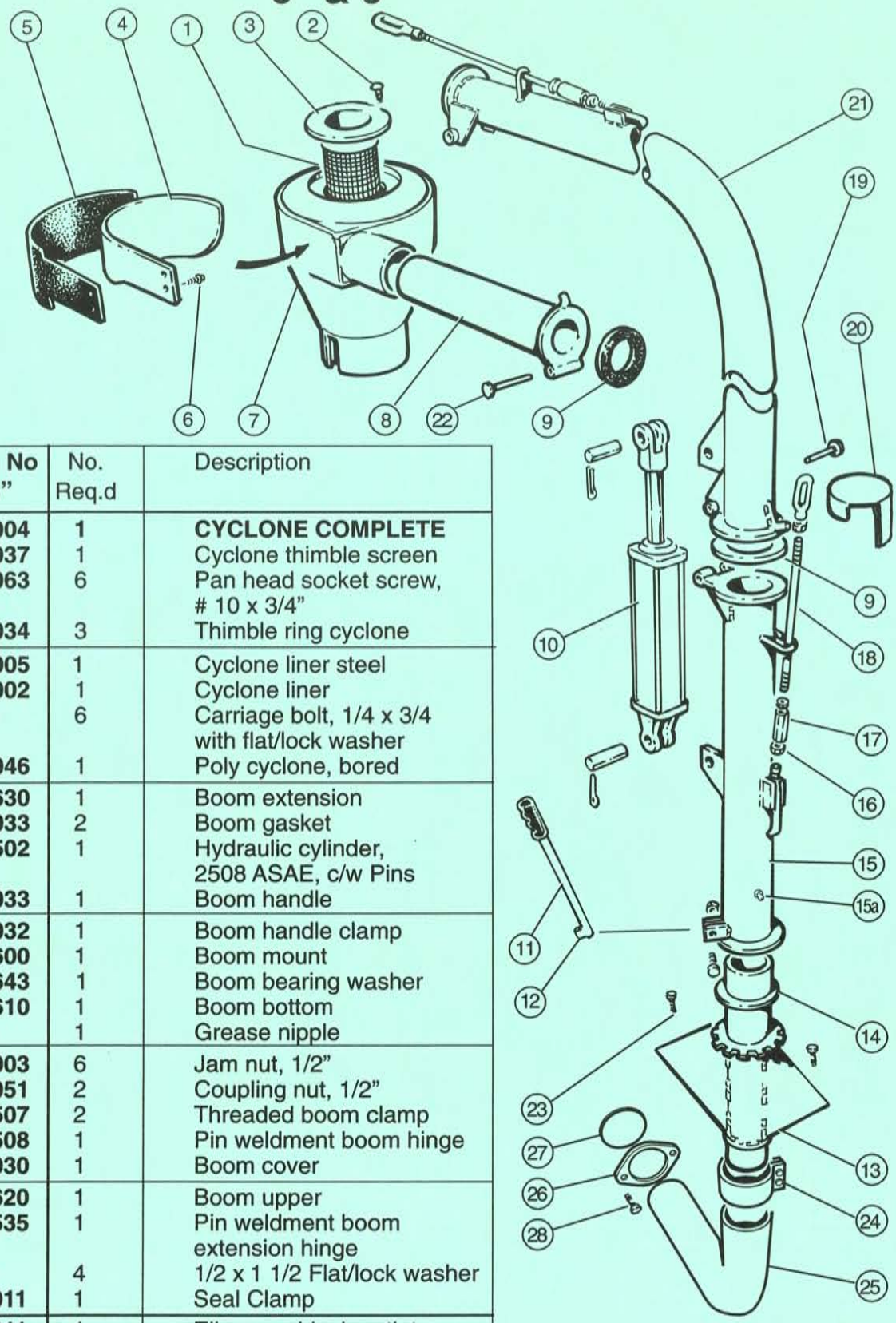

Item No.	Ordering No 5"	Ordering No 6"	No. Req.d	Description
0	**31003**	**31004**	**1**	**CYCLONE COMPLETE**
1	**31037**	**31037**	1	Cyclone thimble screen
2	**56063**	**56063**	6	Pan head socket screw, # 10 x 3/4"
3	**26034**	**26034**	3	Thimble ring cyclone
4	**31005**	**31005**	1	Cyclone liner steel
5	**31002**	**31002**	1	Cyclone liner
6	-	-	6	Carriage bolt, 1/4 x 3/4 with flat/lock washer
7	**31045**	**31046**	1	Poly cyclone, bored
8	**29530**	**29630**	1	Boom extension
9	**64032**	**64033**	2	Boom gasket
10	**22502**	**22502**	1	Hydraulic cylinder, 2508 ASAE, c/w Pins
11	**27033**	**27033**	1	Boom handle
12	**60032**	**60032**	1	Boom handle clamp
13	**29500**	**29600**	1	Boom mount
14	**29543**	**28643**	1	Boom bearing washer
15	**29510**	**29610**	1	Boom bottom
15a	-	-	1	Grease nipple
16	**56003**	**56003**	6	Jam nut, 1/2"
17	**56051**	**56051**	2	Coupling nut, 1/2"
18	**29507**	**29507**	2	Threaded boom clamp
19	**29508**	**29508**	1	Pin weldment boom hinge
20	**60030**	**60030**	1	Boom cover
21	**29520**	**29620**	1	Boom upper
22	**29535**	**29535**	1	Pin weldment boom extension hinge
23	-	-	4	1/2 x 1 1/2 Flat/lock washer
24	**26010**	**26011**	1	Seal Clamp
25	**45511**	**45611**	1	Elbow - airlock outlet
26	**45503**	**45603**	1	Flange - airlock outlet
27	**20013**	**20015**	1	"O" Ring
28	**56013**	**56013**	2	Cap Screw, 3/8" NC-1"

When ordering parts specify:
model, size, serial number and ordering number

Thor Manufacturing Ltd.

BELT DRIVE
(for standard and self contained)

ISSUE 05-9710
Replaces 05-9603

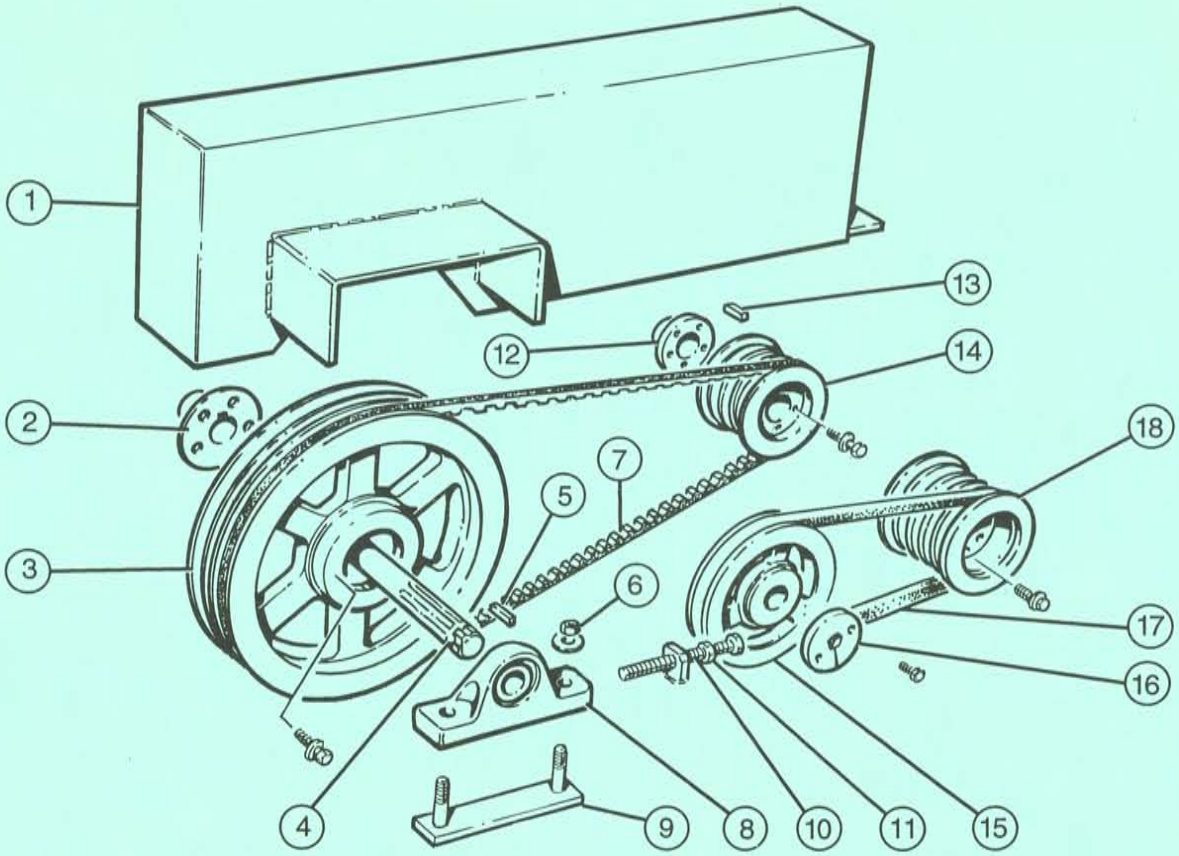

Item No.	Ordering No. 5"	Ordering No. 6"	No Req.d	Description
1	**11520**	**11520**	1	Belt Cover
2	**18503**	**18504**	1	Bushing, 1 3/8 complete with bolts
3	**18004**	**18050**	1	Sheave
4	**18502**	**18502**	1	Spline shaft, 1 3/8, 6 spline
5	**20502**	**20502**	1	Key, 5/16 x 2
6	-	-	2	Flat washer and nylon nut, 1/2 inch
7	**18501**	**18505**	5	V-Belt
8	**20501**	**20501**	2	Pillow block bearing, 1 3/8
9	**11503**	**11503**	2	Bolt weldment - bearing
10	**56026**	**56026**	2	Tap bolt, 1/2 x 3 3/4
11	**56003**	**56003**	2	Jam Nut, 1/2"
12	**18038**	**18010**	1	Bushing, 1 7/16 complete with bolts
13	**20018**	**20018**	1	Key, 3/8 x 2
14	**18011**	**18052**	1	Sheave
SELF CONTAINED HYDRAULICS - OPTIONAL				
15	**18510**	**18510**	1	Sheave, 6.4 QT
16	**18511**	**18511**	1	Bushing, 9/16 QT complete with bolts
17	**18513**	**18513**	1	Belt, B38
18	**18514**	**-**	1	Sheave B6, 6.0, replaces 18011
18	**-**	**18512**	1	Sheave 5V, 5.2, replaces 18052

Thor Manufacturing Ltd.

When ordering parts specify:
model, size, serial number and ordering number

STEEL FLEX HOSE & COUPLERS

5" & 6"

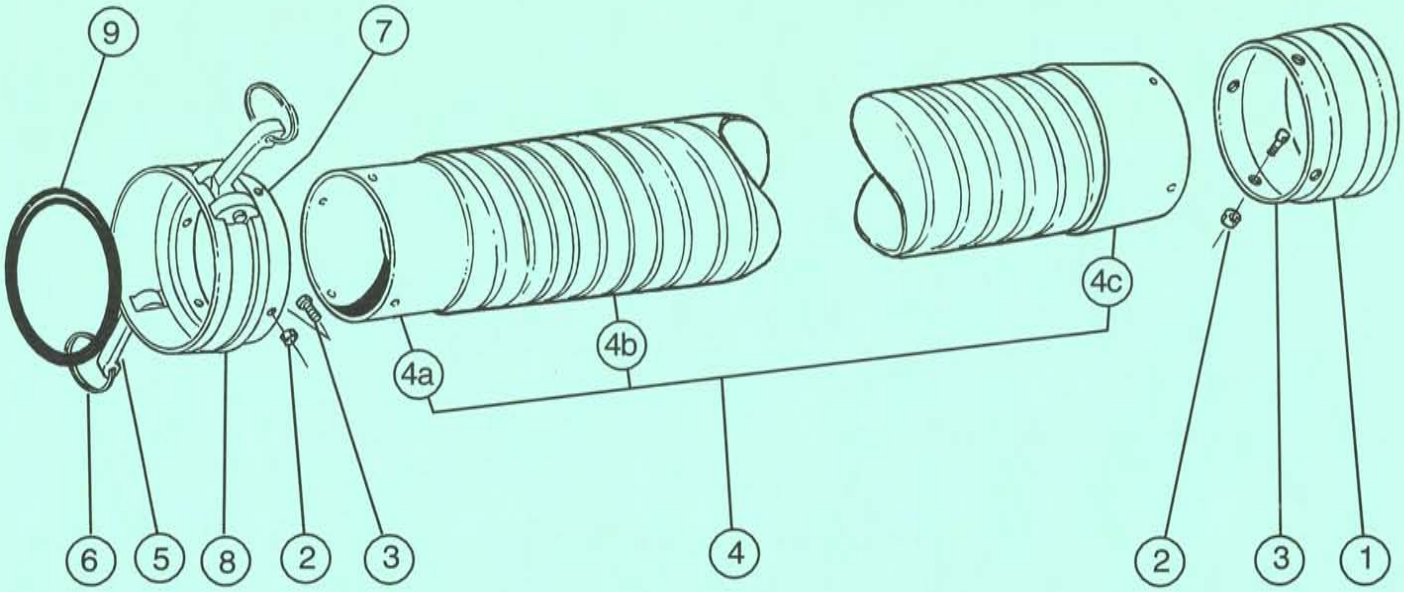

Item No.	Ordering No. 5"	Ordering No. 6"	No Req.d	Description
0	**43032**	**43047**	**1**	**Steel Flex Hose Assembly - includes 1-9**
1	**26006**	**26051**	1	Male Coupler
2	**56030**	**56030**	8	Lock Nut, 1/4" NC x 3/4"
3	**56027**	**56027**	8	Carriage Bolt, 1/4" NC x 3/4:"
4	**43033**	**43048**	1	Steel Flex Hose, 10 ft.
4a	**43029**	**43050**	1	Tubing
4b	**26003**	**26073**	1	Steel Flex Poly Lock, 10 ft.
4c	**26040**	**26047**	1	Hose end reducer
5	**26083**	**26086**	2	Cam Lever
6	**26085**	**26085**	2	Finger Ring
7	**26081**	**26082**	2	Cam Lever Pin
8	**26007**	**26052**	1	Fem Coupler Assembly-includes 5 - 7
9	**64028**	**64029**	1	Coupler Gasket

When ordering parts specify:
model, size, serial number and ordering number

Thor Manufacturing Ltd.

REPAIR PARTS LIST

CLEAN UP HOSE & COUPLERS
5" & 6"

ISSUE 07-9710
Replaces 07-9603

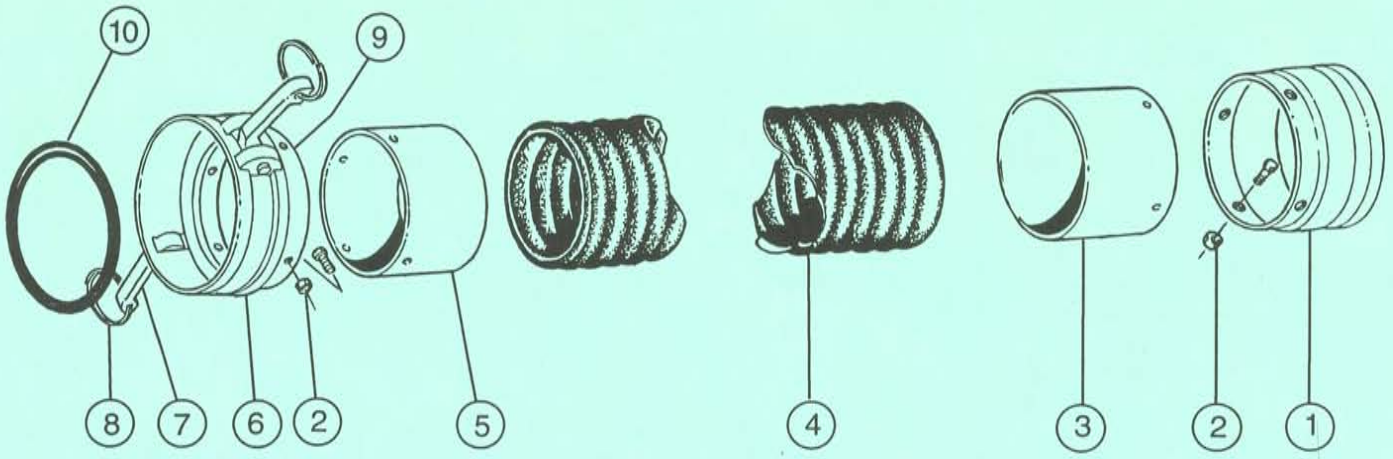

Item No.	Ordering No.	Description	Number Required
0	**43034**	**Complete Hose Assembly - 4" x 14', 4" female x 5" male**	**1**
1	**26006**	Male Coupler, 5"	1
2	**56027**	Carriage Bolt, 1/4" NC x 3/4", Lock Nut & Washer	8
3	**26028**	Reducer, 5" - 4"	1
4	**26112**	Poly Hose, 4" x 14'	14 feet
5	**43100**	Tube	1
6	**26005**	Female Coupler, 4" - includes 7 - 9	1
0	**43056**	**Complete Hose Assembly - 5" x 14', 5" female x 6" male**	**1**
1	**26051**	Male Coupler, 6"	1
2	**56027**	Carriage Bolt, 1/4" NC x 3/4", Lock Nut & Washer	8
3	**26044**	Reducer, 6" - 5"	1
4	**26113**	Poly Hose, 5" x 14'	14 feet
5	**43029**	Tube	1
6	**26007**	Female Coupler, 5" - includes 7 - 9	1
0	**43019**	**Complete Hose Assembly - 6" x 14', 6" female x 6" male**	**1**
1	**26051**	Male Coupler, 6"	1
2	**56027**	Carriage Bolt, 1/4" NC x 3/4", Lock Nut & Washer	8
4	**26120**	Poly Hose, 6" x 14'	14 feet
5	**43050**	Tube	2
6	**26052**	Female Coupler, 6" - includes 7 -9	1
0	**43079**	**Complete Hose Assembly - 5" x 14', 5" female x 5" male**	**1**
1	**26006**	Male Coupler, 5"	1
2	**56027**	Carriage Bolt, 1/4" NC x 3/4", Lock Nut & Washer	8
4	**26113**	Poly Hose, 5" x 14'	14 feet
5	**43029**	Tube	2
6	**26007**	Female Coupler, 5" - includes 7 - 9	1
		Coupler parts	
7	**26083**	Cam Lever, for 4" & 5"	2
7	**26086**	Cam Lever, for 6"	2
8	**26085**	Finger Ring	2
9	**26081**	Pin Cam Lever, for 4" & 5"	2
9	**26082**	Pin Cam Lever, for 6"	2
10	**64027**	Coupler Gasket, for 4"	2
10	**64028**	Coupler Gasket, for 5"	2
10	**64029**	Coupler Gasket, for 6"	2

Thor Manufacturing Ltd.

When ordering parts specify:
model, size, serial number and ordering number

CLEAN UP & BIN NOZZLES

5" & 6"

REPAIR PARTS LIST

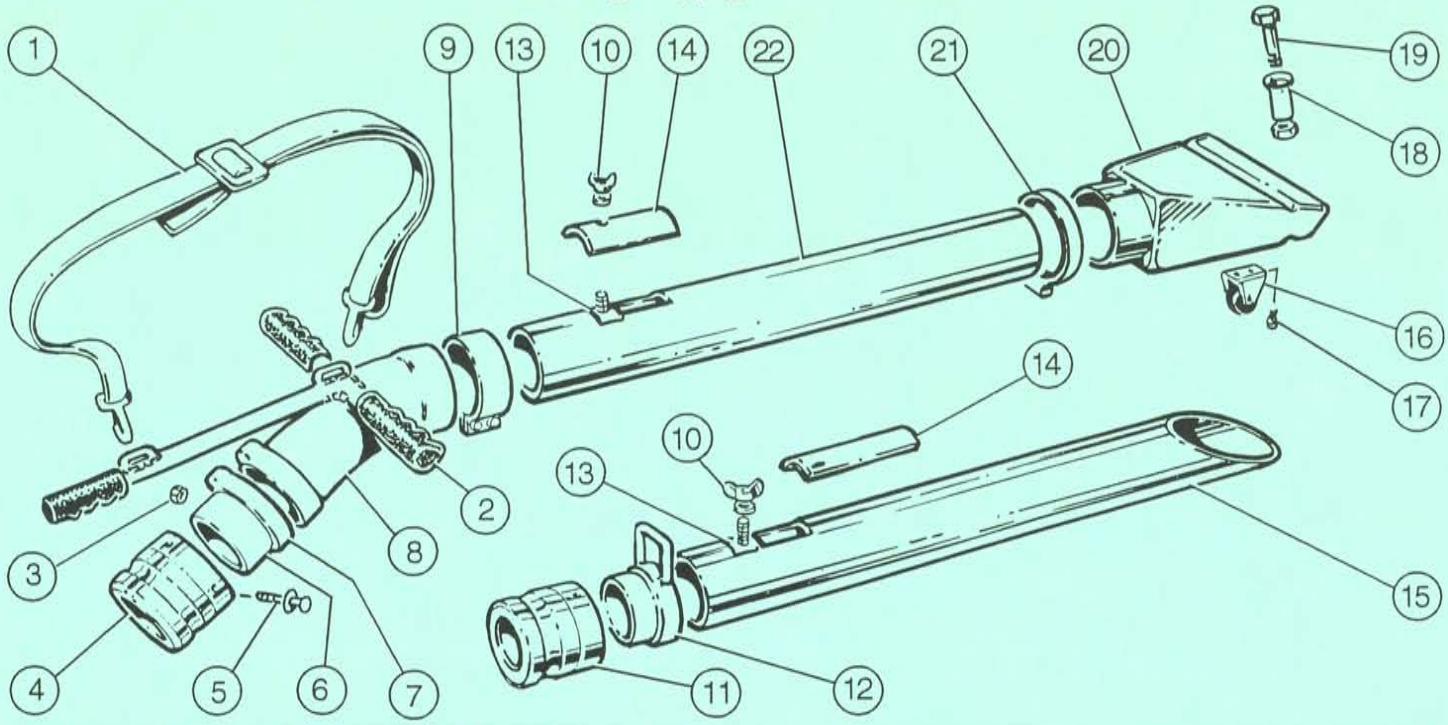

Item No.	Ordering Number 5005	Ordering Number 6006	No. Req'd	Description
0	**43036***	**43030 ****	**1**	**Cleanup assembly complete**
1	60021	60021	1	Shoulder strap
2	60008	60008	1	Handle grip
3	-	-	2	Nylon nut 3/8"
4	26004	26006	1	Male coupler
5	-	-	4	Carriage bolt, 1/4" x 3/4" complete with flat washer
6	43006	43009	1	Rotary male machined
7	43020	43023	1	Retainer weldment
8	43018	43021	1	Rotary elbow weldment
9	26010	26011	1	Seal clamp
10	-	-	2	Wing nut and flat washer, 3/8"
13	43004	43004	2	Bottom slide assembly
14	43003	43003	2	Top slide
16	60009	60009	2	Rigid Caster
17	-	-	1	Carriage bolt, 1/4" x 3/4". complete with washer and nut
18	43060	43060	1	Spacer pipe intake flare
19	-	-	1	Machine bolt, 1/4" x 3", flat lock washer and nut
20	43130	43129	1	Bored intake flare
21	26062	26063	1	Quick release T-bolt clamp
22	43037*	43031**	1	Aluminum tube
00	**43510**	**43610**	**1**	**Full bin nozzle assembly**
10	-	-	2	Wing nut and flat washer, 3/8"
11	26006	26051	11	Male coupler
12	43508	43608	1	Handle
13	43004	43004	2	Bottom slide assembly
14	43003	43003	2	Top slide
15	43509	43609	1	Tube
(4") - 43083	43082 (5")	1		Bored intake Flare assy less T-bolt/clamp

Note:
* For 5005 units, tube and clamp are 4"

** For 6006 units, tube and clamps are 5"

When ordering parts specify:
model, size, serial number and ordering number

Thor Manufacturing Ltd.

printed in Canada NDJH96

REPAIR PARTS LIST

DRIVESHAFT
(LA MAGADALENA - 1000RPM)

ISSUE 09-9812
Replaces 09A-9803

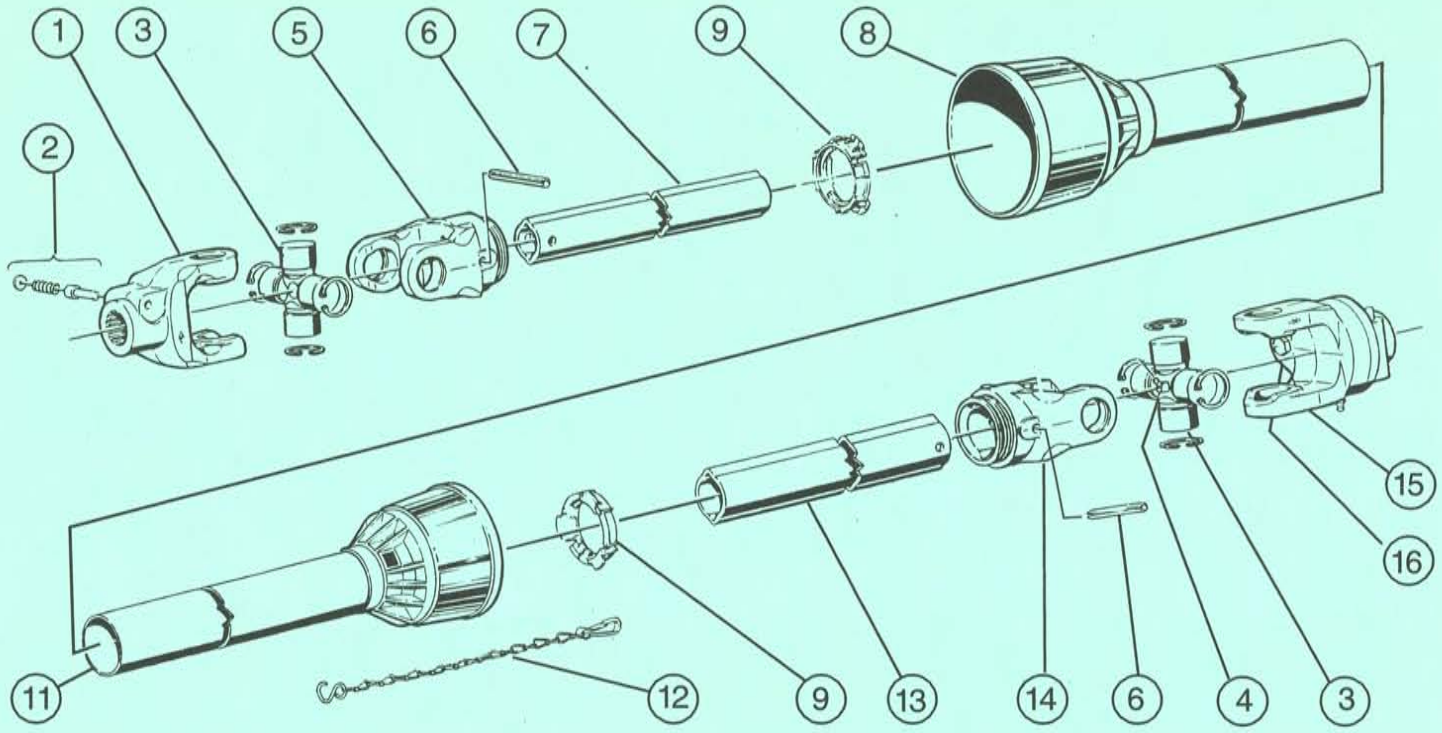

Item No.	Ordering No.	No. Req'd	Description
0	**16102**	**1**	**Drive shaft complete for 5" and 6" units**
1	**16201**	1	End yoke, 1 3/8" - 21 spline
2	**16202**	2	Pin Kit
3	**16203**	2	Cross and bearing kit
4	**16110**	2	Grease nipple
5	**16204**	1	Yoke, Inner profile
6	**16112**	2	Spring pin
7	**16205**	1	Inner profile
8	**16208**	1	Outer shield tube
9	**16209**	2	Shield bearing
10	**16207**	2	Shield Complete - Inner & Outer
11	**16210**	1	Inner shield tube
12	**16211**	1	Safety Chain
13	**16212**	1	Outer profile
14	**16213**	1	Yoke, outer profile
15	**16214**	1	Shear bolt clutch yoke
16	**16108**	1	Shear bolt, 5/16" NC x 2 1/2", grade 5

printed in Canada NDJH96

REPAIR PARTS LIST

DRIVESHAFT
(WALTERSHEID - 1000RPM)

ISSUE 09-9710
Replaces 09-9611

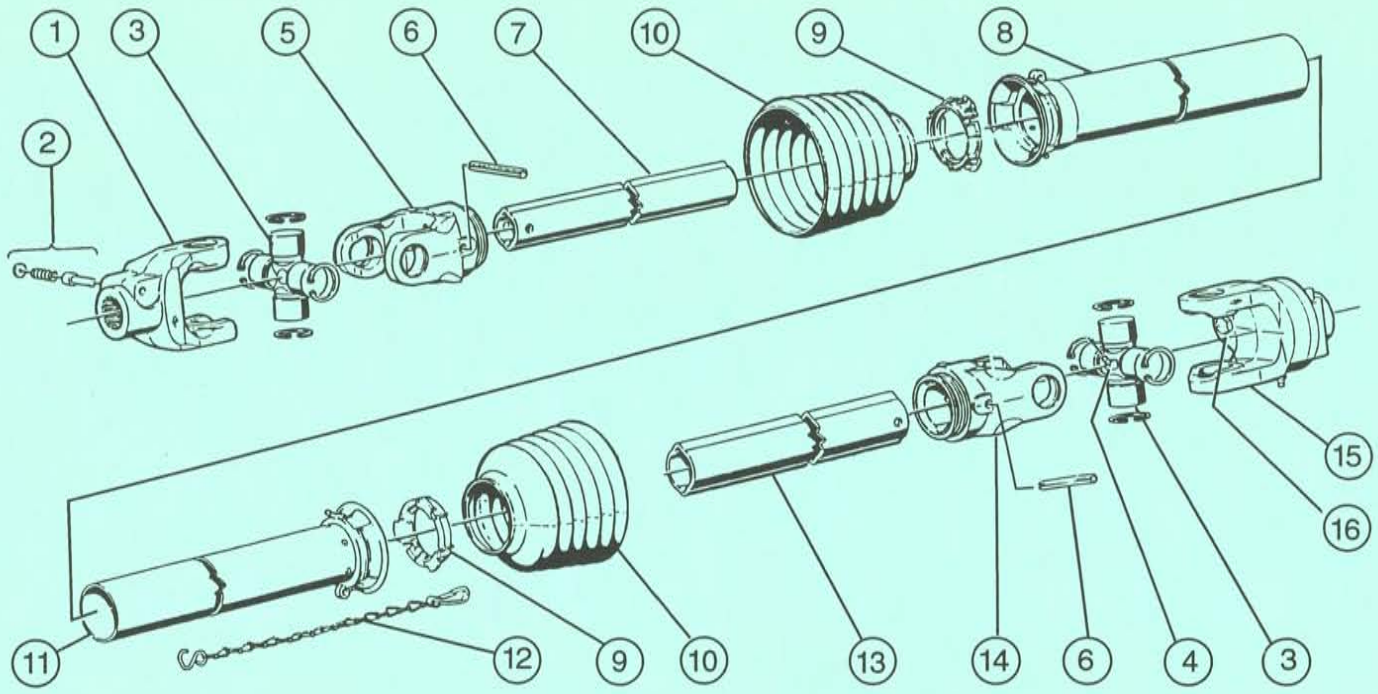

Item No.	Ordering No.	No. Req'd	Description
0	**16100**	**1**	**Drive shaft complete for 5" and 6" units**
1	**16105**	1	End yoke, 1 3/8" - 21 spline
2	**16106**	2	Pin Kit
3	**16109**	2	Cross and bearing kit
4	**16110**	2	Grease nipple
5	**16111**	1	Yoke, Inner profile
6	**16112**	2	Spring pin
7	**16113**	1	Inner profile
8	**16118**	1	Outer shield tube
9	**16117**	2	Shield bearing
10	**16116**	2	Shield cone
11	**16119**	1	Inner shield tube
12	**16120**	1	Safety Chain
13	**16114**	1	Outer profile
14	**16115**	1	Yoke, outer profile
15	**16107**	1	Shear bolt clutch yoke
16	**16108**	1	Shear bolt, 5/16" NC x 2 1/2", grade 5

printed in Canada NDJH96

Thor Manufacturing Ltd.

When ordering parts specify:
model, size, serial number and ordering number

STANDARD HYDRAULIC SYSTEM

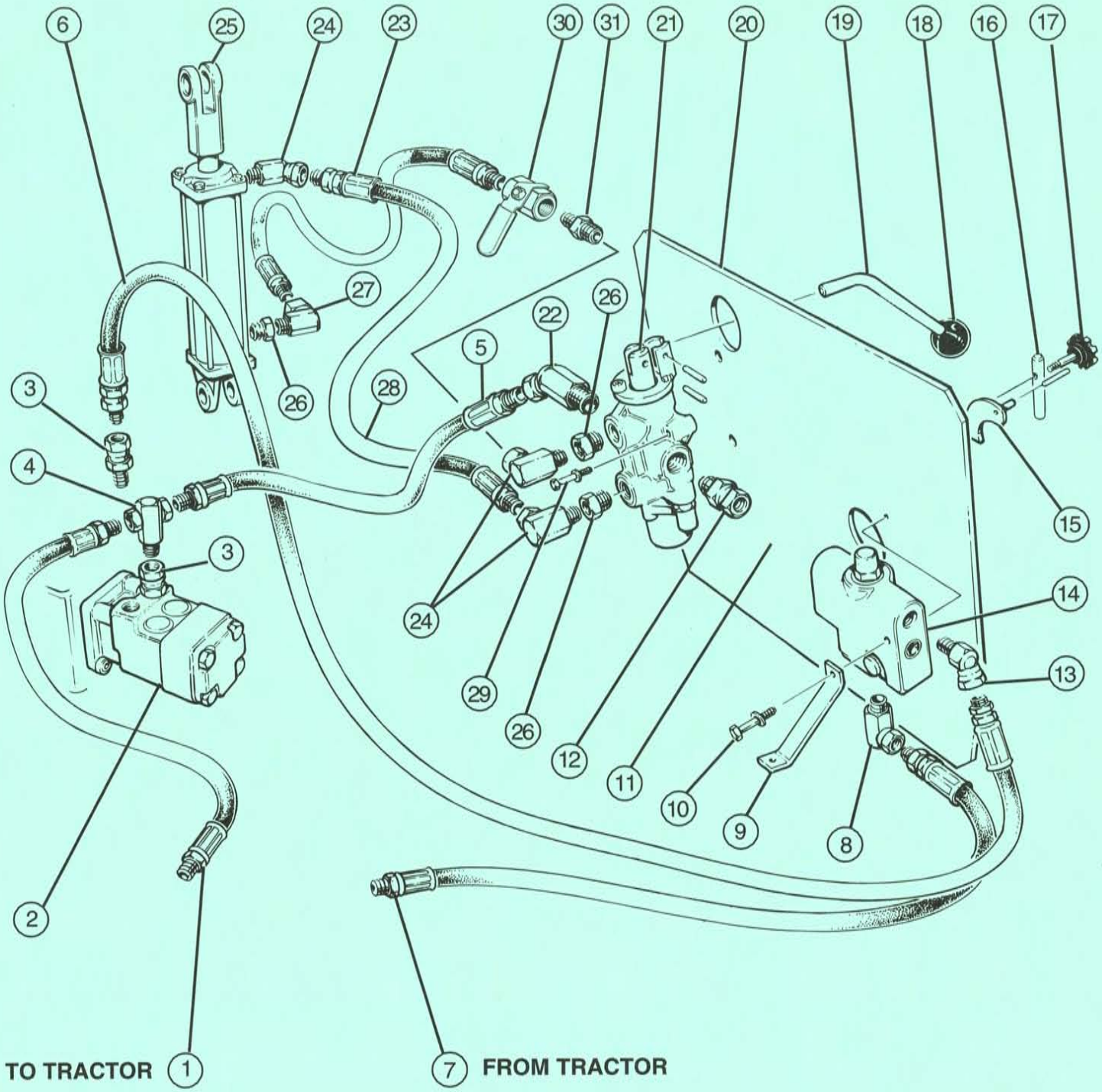

When ordering parts specify:
model, size, serial number and ordering number

Thor Manufacturing Ltd.

REPAIR PARTS LIST

STANDARD HYDRAULIC SYSTEM

(for 5" & 6" models)

ISSUE 13-9812
Replaces 11-9603

Item No.	**Ordering Number**	No. Req.d	Description
1	**22514**	1	Hose, 1/2" x 114"
2	**22228**	1	Hydraulic motor, White
3	**22131**	2	Adapter orb to pipe thread
4	**22508**	1	Swivel Tee
5	**22524**	1	Hose, 1/2" x 42"
6	**22513**	1	Hose, 1/2" x 48"
7	**22515**	1	Hose, 1/2" x 156"
8	**22507**	1	90 degree swivel elbow, 1/2"
9	**22511**	1	Brace, hydraulic mount
10	-	2	Bolt complete with washer and nut, 1/4" x 2 1/2"
11	**22506**	1	Pipe nipple, 1/2"
12	**22503**	1	Straight swivel, 3/4" x 1/2"
13	**22505**	1	Elbow swivel, 45 degree - 1/2"
14	**22501**	1	Flow control
15	**26168**	1	Indicator plate - for flow control
16	**22166**	1	Handle - for flow control
17	**22165**	1	Knob - for flow control handle
18	**22536**	1	Knob - for control valve
19	**22525**	1	Handle - for control valve
20	**22510**	1	Hydraulic valve mount
21	**22203**	1	Boom valve
22	**22520**	1	Swivel elbow , 3/4" x 1/2"
23	**22517**	1	Hose, 1/4" x 160"
24	**22519**	3	Swivel elbow, 3/8" x 1/4"
25	**22502**	1	Hydraulic cylinder, 2508 ASAE
26	**22521**	3	Reducer, 3/8" x 1/4"
27	**22533**	1	Swivel orifice, .04
28	**22516**	1	Hose, 1/4" x 150"
29	-	2	Bolt complete with washer and nut, 1/4" x 1 1/2"
30	22547	1	Ball valve
31	22548	1	Pipe nipple, 1/4"

HYDRAULIC SYSTEM
(WITH REVERSE OPTION)

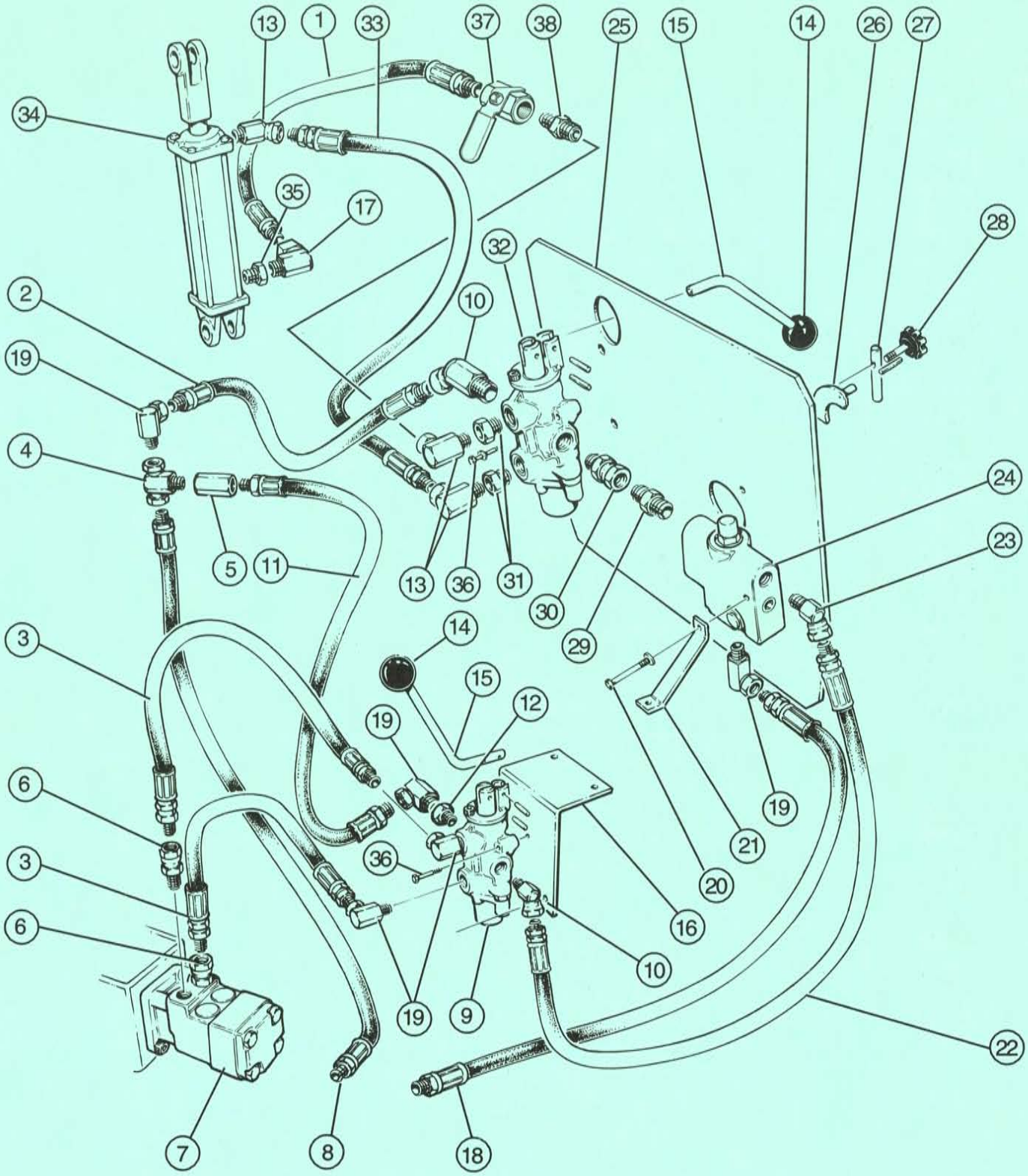

When ordering parts specify:
model, size, serial number and ordering number

Thor Manufacturing Ltd.

REPAIR PARTS LIST

HYDRAULIC SYSTEM
(WITH REVERSE OPTION)

ISSUE15-9812
Replaces 13-9603

Item No.	Ordering Number	Number Required	Description
1	**22516**	1	Hose, 1/4" x 150"
2	**22524**	1	Hose, 1/2" x 42"
3	**22575**	2	Hose, 1/2" x 21"
4	**22508**	1	Swivel Tee
5	**22525**	1	Pipe coupler
6	**22131**	2	Adapter, ORB to pipe thread
7	**22228**	1	Hydraulic motor, White
8	**22514**	1	Hose, 1/2" x 114"
9	**22017**	1	Control valve airlock
10	**22520**	2	Swivel elbow, 45º, 3/4" x 1/2"
11	**22578**	1	Hose, 1/2" x 1/2"
12	**22215**	1	Reducer, 3/4" x 12"
13	**22519**	3	Swivel elbow, 3/8" x 1/4"
14	**22536**	2	Knob - for control valve
15	**22535**	2	Handle - for control valve
16	**22572**	1	Mount - for hydraulic valve
17	**22533**	1	Swivel elbow, .040 orifice
18	**22515**	1	Hose, 1/2" x 156"
19	**22507**	5	90º swivel elbow, 1/2"
20	-	2	Bolt, complete with flat washer and nut, 1/4" x 2 1/2"
21	**22511**	1	Brace - for hydraulic mount
22	**22568**	1	Hose, 1/2" x 36"
23	**22505**	1	45º Swivel elbow, 1/2"
24	**22501**	1	Flow control
25	**22510**	1	Mount - for hydraulic valve
26	**22168**	1	Indicator plate - for flow control valve
27	**22166**	1	Handle - for flow control valve
28	**22165**	1	Knob - for flow control valve
29	**22506**	1	Pipe nipple, 1/2"
30	**22503**	1	Straight swivel, 3/4" x 1/2"
31	**22521**	2	Reducer, 1/2' to 3/8"
32	**22203**	1	Boom valve
33	**22517**	1	Hose, 1/4" x 160"
34	**22502**	1	Hydraulic cylinder, 2508 ASAE
35	**22521**	1	Reducer, 3/8" x 1/4"
36	-	2	Bolt, complete with flat washer and nut, 1/4" x 1 1/2"
37	22547	1	Valve
38	22548	1	Nipple - 1/4"

Thor Manufacturing Ltd.

When ordering parts specify:
model, size, serial number and ordering number

SELF CONTAINED HYDRAULIC SYSTEM
(WITH REVERSE OPTION)

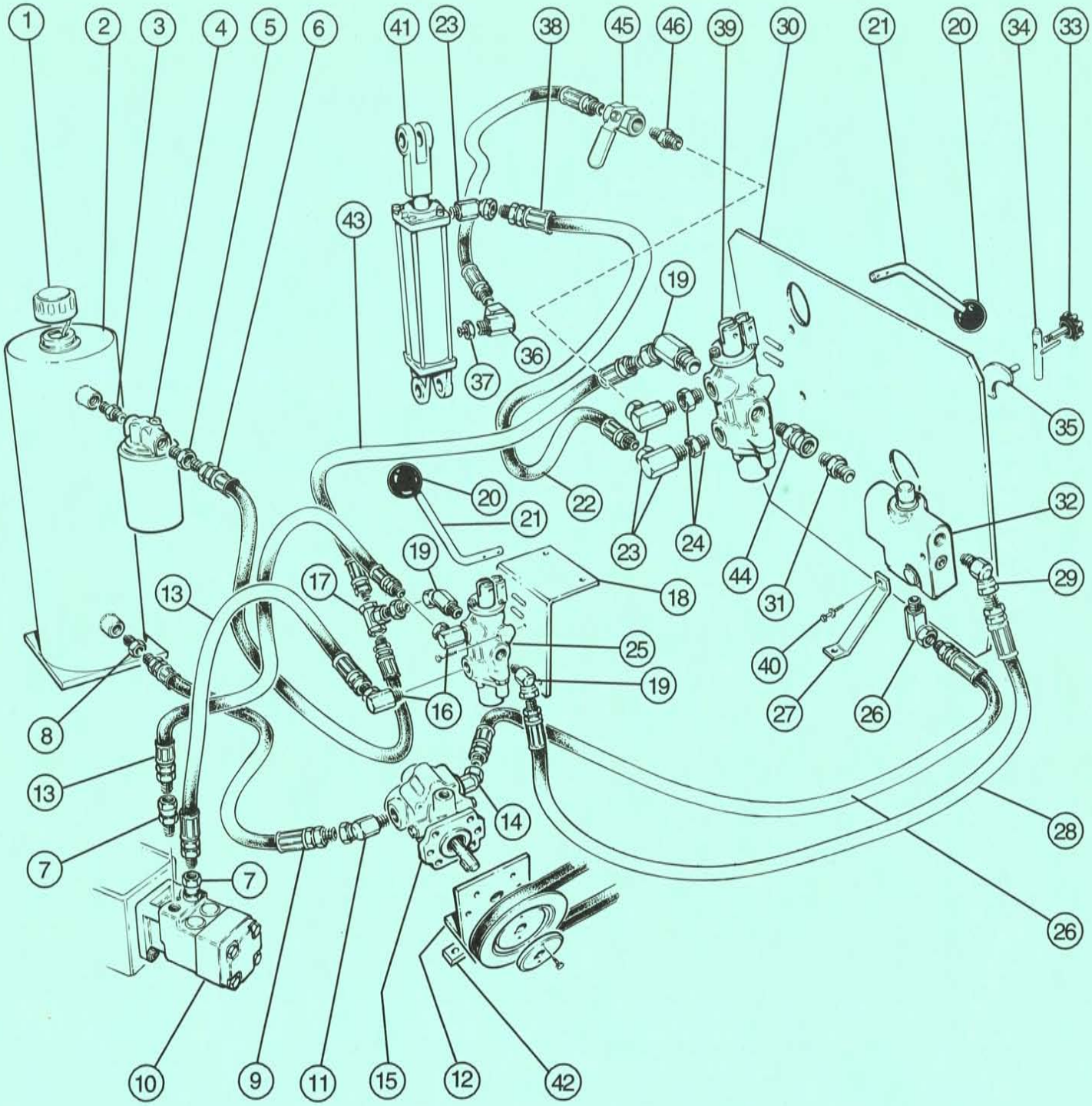

When ordering parts specify:
model, size, serial number and ordering number

Thor Manufacturing Ltd.

REPAIR PARTS LIST

SELF CONTAINED HYDRAULIC SYSTEM
(WITH REVERSE OPTION)

ISSUE 17-9812
Replaces 15-9603

Item No.	Ordering Number	Number Required	Description
1	**22066**	1	Filler breather
2	**22550**	1	Tank - for self contained hydraulics
3	**22136**	1	Pipe nipple, 3/4" x 2 1/2"
4	**22067**	1	Filter
5	**22518**	1	Reducer, 3/4" x 1/2"
6	**22570**	1	Hose, 1/2" x 54"
7	**22131**	2	Adapter, ORB to pipe thread
8	**22518**	3	Reducer, 1/2" x 3/8"
9	**22085**	1	Hose, 1/2" x 42"
10	**22228**	1	Hydraulic motor, white
11	**22505**	2	Swivel elbow, 45º, 1/2"
11	**22542**	2	90º Elbow - Serial 2659 & up
12	**22564**	1	Mount - for hydraulic pump
13	**22575**	2	Hose, 1/2" x 21"
14	**22573**	1	90º Swivel elbow, 3/8"
14	**22541**	1	90º Elbow - Serial 2659 & up
15	**22540**	1	Hydraulic pump
15	**22543**	1	Hydraulic Pump - Serial 2659 & up
16	**22507**	3	90º Swivel elbow, 1/2"
17	**22508**	1	Swivel Tee, 1/2"
18	**22572**	1	Mount - for hydraulic valve
19	**22520**	2	45º Swivel elbow, 3/4" x 1/2"
20	**22536**	1	Knob for control valve
21	**22535**	1	Handle hydraulic valve
22	**22516**	1	Hose, 1/4" x 150"
23	**22519**	3	90º Swivel elbow, 3/8"
24	**22521**	2	Reducer, 1/2" x 3/8"
25	**22017**	1	Control valve - airlock
26	**22567**	1	Hose, 3/8" x 40"
27	**22511**	1	Brace, hydraulic mount
28	**22568**	1	Hose, 1/2" x 36"
29	**22505**	1	Elbow swivel, 45º, 1/2"
30	**22510**	1	Mount for hydraulic valve
31	**22506**	1	Pipe nipple, 1/2"
32	**22501**	1	Flow control
33	**22165**	1	Knob - for flow control
34	**22166**	1	Handle - for flow control
35	**22168**	1	Indicator plate - for flow control
36	**25533**	2	Swivel elbow, .040 orifice
37	**22521**	1	Reducer, 3/8" x 1/4"
38	**22517**	1	Hose, 1/4" x 160"
39	**22203**	1	Hydraulic valve
40	-	2	Bolt, complete with flat washer and nut, 1/4" 2 1/2"
41	**22502**	1	Hydraulic cylinder, 2508 ASAE
42	**22563**	1	Clamp - for hydraulic pump mount
43	**22569**	1	Hose, 1/2" x 26"
44	**22503**	1	Swivel straight , 3/4" x 1/2"
45	**22547**	1	Boom Lock Valve
46	**22548**	1	Pipe Nipple 1/4"

LIMITED WARRANTY

Thor Manufacturing Ltd. (hereafter referred to as "Thor") products are warranted for a period of twelve (12) months from the date of delivery to the original purchaser, to be free from defects in material and workmanship when used under correct, normal agricultural use and proper applications.

Thor's obligation under the warranty shall be limited to the repair or exchange (at Thor's option) of any part which proves to be defective as provided.

The buyer shall be responsible for all expenses incurred as a result of repairs, labour, parts, transportation or any other work unless a Thor dealer has authorized such expenses in advance. It is the responsibility of the dealer to get approval from Thor before authorizing warranty work being done. Thor reserves the right to either inspect the product at the buyer's location or have the defective part returned to the factory for inspection.

The above warranty does not extend to goods damaged or subject to accidents, abuse or misuse after shipment from Thor's factory, nor to goods altered or repaired without authorization of Thor.

Thor makes no Express Warranty other than those which are specifically described. Any description of goods, including any reference to specifications in catalogues, circulaires, and other written material published, is for the sole purpose of identifying goods and shall conform to such descriptions. Any sample or model is for illustration purposes only, and does not create an Express Warranty that the goods conform to the sample or model.

The dealer is solely responsible for determining the suitability of goods sold.

THOR MAKES NO WARRANTY OF MERCHANTABILITY OF FITNESS FOR A PARTICULAR PURPOSE.

This warranty is expressly in lieu of all other warranties expressed or implied. Thor will in no event, be liable for any incidental or consequential damages, nor for any sum in excess of the price received for the goods for which liability is claimed.

Claims for warranty must be made on Thor Warranty Claim Forms within 10 days of the failure occurrence. Warranty Authorization numbers are available from the factory and must be indicated on the Warranty Claim Form for all claims over a total dollar value of $ 100.00.

The labour rate for warranty work where applicable will be credited at a rate determined by Thor.

IMPORTANT: The blower and airlock carry NO warranty for wear and/or damage due to foreign matter such as metal objects or stones passing through them. Warranty is void when unit is used for moving material other than cereal grains, grass seeds or pulse crops.

THOR MANUFACTURING LTD.

Thor MANUFACTURING LTD.

77 Beghin Ave., Winnipeg, Manitoba, Canada R2J 3S8

Phone: in N. America 1-800-582-3944 in other parts of the world 1 - 204-982-8356

Fax 1-204-663-8238

Issue date January 1999 **Part Number 90.500** **Cost $ 25.00 plus $ 2.50 postage**

Printed in Canada NDJH9901