Farm King

OPERATOR AND PARTS MANUAL

Rotary Tiller

45 Series - 60"& 72"

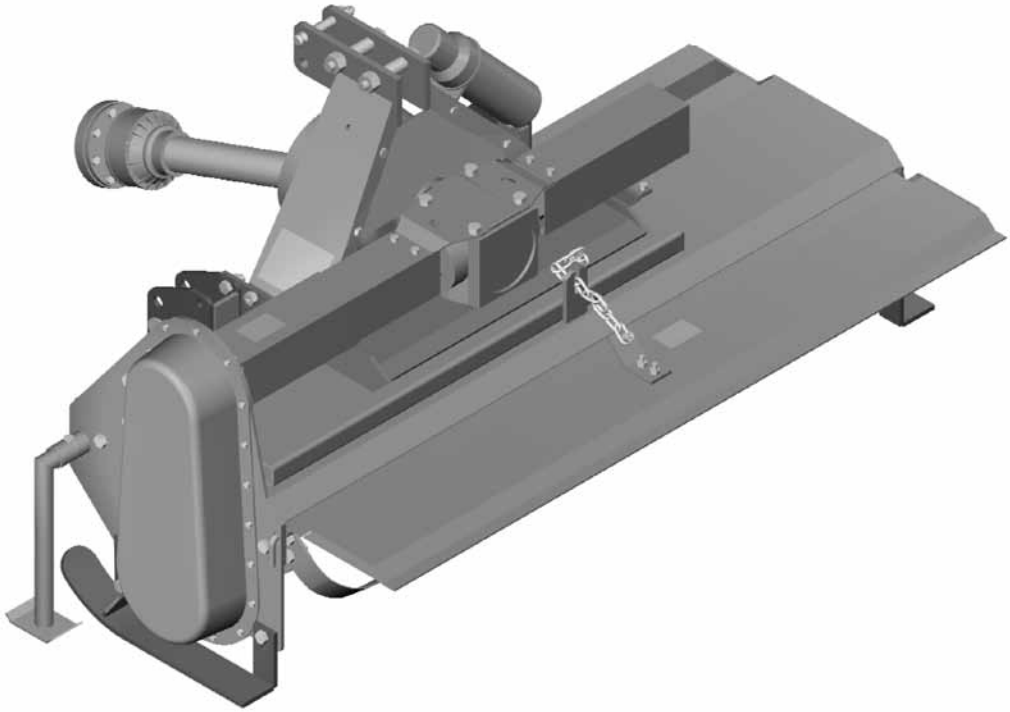

092010 FK366

Table of Contents

Introduction **5**

Safety **6**
- Safety 6
- General Safety 7
- Start-up Safety 7
- Operation Safety 7
- Transport Safety 7
- Service and Maintenance Safety 8
- Storage Safety 8
- Safety Signs 8
- Safety Sign Installation 8

Assembly **10**
- Assembly Instructions 10

Start-up **10**
- Machine Break-in 10
- Pre-operation Checklist 11

Operation **12**
- Machine Components 12
- Equipment Matching 13
- Driveline Dimension 14
- Attaching/Unhooking 16
- Field Operation 17
- Transporting 19
- Theory of Operation 20
- Storage 21

Maintenance **22**
- Service 22
- Fluids and Lubricants 22
- Greasing 22
- Servicing Intervals 23
- A-frame Adjustment 24
- Time Replacement 25
- Slip Clutch 25
- Clutch Maintenance 26

- Troubleshooting 27

Bolt Torque 28
- Checking Bolt Torque 28

Parts Drawings 29
- Tiller Drawings 29
- Tiller Parts List 31
- PTO Assembly Drawing 34
- PTO Assembly Parts List 35
- Gearbox Drawing and Parts List 36

Shipping Kit and Bundle Numbers 37

Warranty 38

Manufacturer's statement: for technical reasons Buhler Industries Inc. reserves the right to modify machinery design and specifications provided herein without any preliminary notice.
Information provided herein is of descriptive nature. Performance quality may depend on soil fertility, applied agricultural techniques, weather conditions and other factors.

Introduction

Farm King has a collection of rotary tiller models to suit your garden and landscaping needs. The 45 Series Tiller attaches to the 3-point hitch as well as Cat. 1 Quick Hitch and is designed to fit a variety of tractors, from 25 hp to 45 hp. Tilling widths range from 55" to 69" in the 45 Series.

The tilling shaft is equipped with six to eight flanges, depending on the model. Flanges on all series are available with four tines. This provides an optimum balance between performance and durability, even in heavy soils and when breaking untilled soil.

Standard on all Farm King Rotary Tillers, the skid shoes are adjustable so it is easy to set the perfect tilling depth. The automatic chain tightener is standard on all models. This ensures the chain remains tight even under the toughest tilling conditions. Housed within a sealed oil bath, the chain tightener is designed to be reliable and maintenance-free. Getting close to the fences, hedges or covering a tire track is easy with the side shift feature. The entire unit can be pushed to one side, while the PTO shaft remains in line with the tractor to minimize stress on the universal joint.

Keep this manual handy for frequent reference. All new operators or owners must review the manual before using the equipment and at least annually thereafter. Contact your Farm King Dealer if you need assistance, information, or additional copies of the manual. Visit our website at www.buhlerindustries.com for a complete list of dealers in your area.

The directions left, right, front and rear, as mentioned throughout this manual, are as seen facing in the direction of travel of the implement.

Safety

Safety Instructions

Remember, YOU are the key to safety. Good safety practices not only protect you, but also the people around you. Make these practices a working part of your safety program. Be certain that everyone operating this equipment is familiar with the recommended operating and maintenance procedures and follows all the safety precautions. Most accidents can be prevented. Do not risk injury or death by ignoring good safety practices.

The alert symbol is used throughout this manual. It indicates attention is required and identifies hazards. Follow the recommended precautions.

The safety alert symbol means...
ATTENTION! BECOME ALERT! YOUR SAFETY IS INVOLVED!

	CAUTION	The caution symbol indicates a potentially hazardous situation that, if not avoided, may result in minor or moderate injury. It may also be used to alert against unsafe practices.
	WARNING	The Warning Symbol indicates a potentially hazardous situation that, if not avoided, could result in death or serious injury, and includes hazards that are exposed when guards are removed. It may also be used to alert against unsafe practices.
	DANGER	The Danger Symbol indicates an imminently hazardous situation that, if not avoided will result in death or serious injury. This signal word is to be limited to the most extreme situations, typically for machine components that, for functional purposes, cannot be guarded.

General Safety Instructions

- Have a first-aid kit available for use and know how to use it.
- Have a fire extinguisher available, stored in a highly visible location, and know how to use it.
- Wear appropriate protective gear. This list may include but is not limited to:
  - hard hat
  - protective shoes with slip resistant soles
  - protective glasses or goggles
  - heavy gloves
  - wet weather gear
  - hearing protection
  - respirator or filter mask
- Read and understand the Operator's Manual and all safety signs before operating, servicing, adjusting, repairing, or unplugging the equipment.
- Do not attempt any unauthorized modifications to your Farm King product as this could affect function or safety, and could affect the life of the equipment.
- Never start or operate the mower except from the operator's station on the power unit.
- Inspect and clean the working area before operating.
- Keep hands, feet, clothing, and hair away from moving parts.
- Ensure bystanders are clear of the area before operating.

Start-up Safety

- Do not let inexperienced operators or children run this equipment.
- Place all tractor and machine controls in neutral before starting.
- Operate only with ROPS and seatbelt equipped tractors.
- Do not operate inside a building unless there is adequate ventilation.
- Ensure all shields are in place and in good condition before operating.
- Stay clear of PTO shaft and machine when engaging PTO.

Operation Safety

- Do not permit riders.
- Do not wear loose fitting clothing during operation.
- Never operate over 540 PTO rpm speed.
- Never operate the equipment in the raised position.

Transport Safety

- Review Transport Safety instructions in tractor manual before moving.
- Check with local authorities regarding transport on public roads. Obey all applicable laws and regulations.
- Make sure the SMV (Slow Moving Vehicle) emblem and all the lights and reflectors that are required by the local highway and transport authorities are in place, are clean, and can be seen clearly by all overtaking and oncoming traffic.
- Never have the equipment in operation during transport.
- Always travel at a safe speed.

Service and Maintenance Safety

- Stop engine, set brake, remove ignition key, and wait for all moving parts to stop before servicing, adjusting, repairing, or unplugging.
- Support the equipment with blocks or safety stands before working beneath it.
- Follow good shop practices including:
  - keep service area clean and dry
  - be sure electrical outlets and tools are properly grounded
  - use adequate light for the job.
- Use only tools, jacks, and hoists of sufficient capacity for the job.
- Replace and secure all shields removed during servicing before operating.
- Use heavy leather gloves to handle sharp objects.

Storage Safety

- Store the unit in an area away from human activity.
- Do not permit children to play on or around the stored machine.
- Support the frame on stands and blocks to provide a secure base.

Safety Signs

- The following illustration shows the approximate location and detail of safety signs.
- Keep all safety signs clean and legible and replace any that are damaged or missing.
- When original parts are replaced, any safety signs affixed to those parts should be replaced as well. Replacement safety signs are available from your local dealer.

Installation

- To install safety signs, ensure the installation area is clean and dry. Decide on the exact position before you remove the backing paper. Remove the smallest portion of the split backing paper and align over the specified area. Carefully press in place.
- Slowly peel back the remaining paper and smooth the remaining portion in place. Small air pockets can be pierced with a pin and s

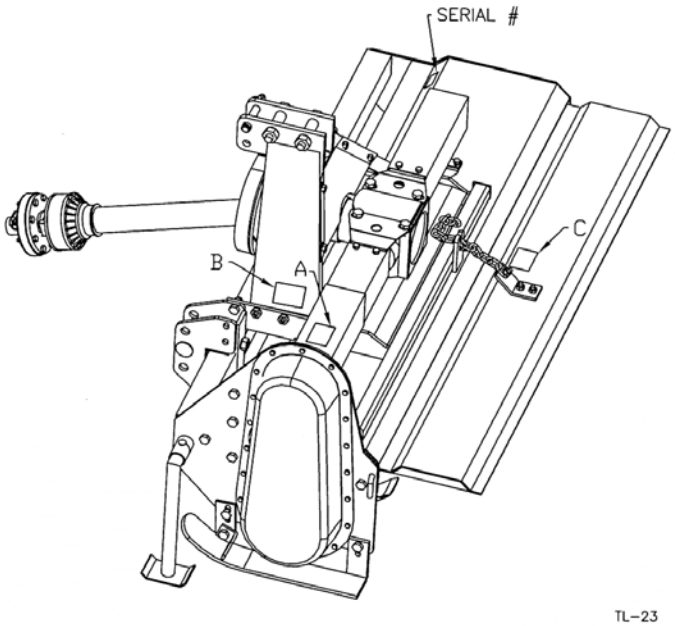

TL–23

- Replace safety signs immediately should they become damaged, torn or illegible. Obtain replacements from your authorized dealer using the part numbers shown.

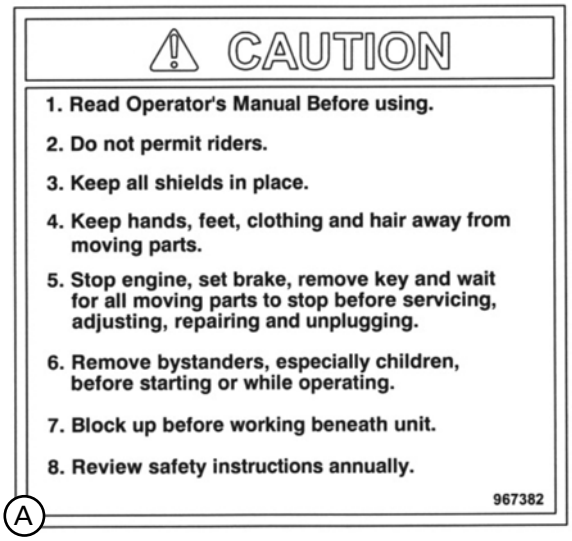

Assembly Instructions

The machine is shipped with the PTO shaft not installed.

To install the PTO driveline on the machine, follow this procedure.

1. Clear the area of bystanders, especially small children.
2. Clean the splines on the yoke and the input shaft.
3. Align the splines on the yoke and the shaft.
4. Attach the driveline to the tiller by removing the tapered pin and sliding the yoke onto the gearbox shaft. Line up the pin with the groove in the gearbox shaft and fasten with the tapered pin. The plastic gearbox PTO guard has a removable door on top to access the pin. The A-frame brace can be removed to improve accessibility. Replace the brace after tightening the nut on the tapered pin.
5. Be sure the yoke is locked in position. Pull on the yoke to be sure the pin clicks into position.
6. Be sure that the PTO shaft is the appropriate length for the tractor/Tiller combination. Refer to Driveline Dimension Section for details.

Start-up

Machine Break-in

Although there are no operational restrictions on the Tiller when used for the first time, it is recommended that the following mechanical items be checked:

- After operating for 1/2 hour or after completing 1/2 acre:
  - Check all nuts, bolts and other fasteners. Tighten to their specified torque level.
  - Check that the blades are in good condition and bolted securely to the rotor.
  - Check the oil level in the gearbox. Add as required.
  - Check that the PTO driveline shield turns freely.
  - Lubricate all grease points.
- After operating for 5 hours and 10 hours:
  - Repeat the items above.
  - Then go to the regular service schedule as defined in Section 5.

Pre-operation Checklist

Efficient and safe operation of the Rotary Tiller requires that each operator reads and understands the operating procedures and all related safety precautions outlined in this section. A pre-operation checklist is provided for the operator. It is important for both personal safety and maintaining the good mechanical condition of the Tiller that this checklist is followed.

- Before operating the machine and each time thereafter, the following areas should be checked off:

☐ Lubricate the machine per the schedule outlined in the Service and Maintenance Section.
☐ Use only a tractor of adequate power and weight to pull the machine.
☐ Check that the machine is properly attached to the tractor. Be sure retainers are used on the mounting pins.
☐ Check the oil level in the gearbox. Add as required.
☐ Check that the PTO driveline shield turns freely and that the driveline can telescope easily. Clean and lubricate if required.
☐ Check the blades. Be sure they are not damaged or broken and are bolted securely to the rotor. Repair or replace as required.
☐ Remove any entangled material on rotating parts.
☐ Install and secure all guards, doors and covers before starting.
☐ The four socket set screws on the inside of the PTO clutch assembly must be turned out as far as they go to engage the clutch.

Operation Instructions

The Farm King 45 Series Rotary Tiller is a machine that combines the primary and secondary tillage operation into one machine. It breaks up the soil and prepares the seed bed in one pass. Rotational power to the rotor is provided by the tractor PTO. Be familiar with the machine before starting.

NOTE: It is the responsibility of the owner or operator to read this manual and to train all other operators before they start working with the machine. Follow all safety instructions exactly. Safety is everyone's business. By following recommended procedures, a safe working environment is provided for the operator, bystanders and the area around the work site. Untrained operators are not qualified to operate the machine.

Many features incorporated into this machine are the result of suggestions made by customers like you. Read this manual carefully to learn how to operate the machine safely and how to set it to provide maximum field efficiency. By following the operating instructions in conjunction with a good maintenance program, your Tiller will provide many years of trouble free service.

Machine Components

The Farm King 45 Series Rotary Tiller consists of a rotating drum that is equipped with bent blades for breaking up and leveling soil. The blades are turned through the soil while the machine moves over the working area. A Drag Shield is used to maintain a level seedbed. Rotational power to the drum is provided by the PTO on the tractor. The power is transmitted through the gearbox in the center of the machine to the chain drive down the side. The A-frame can be moved to offset the machine.

A - Point A-frame
B - PTO Driveline
C - Gear Box
D - Chain Drive
E - Rotor
F - Blades
G - Skid Plates

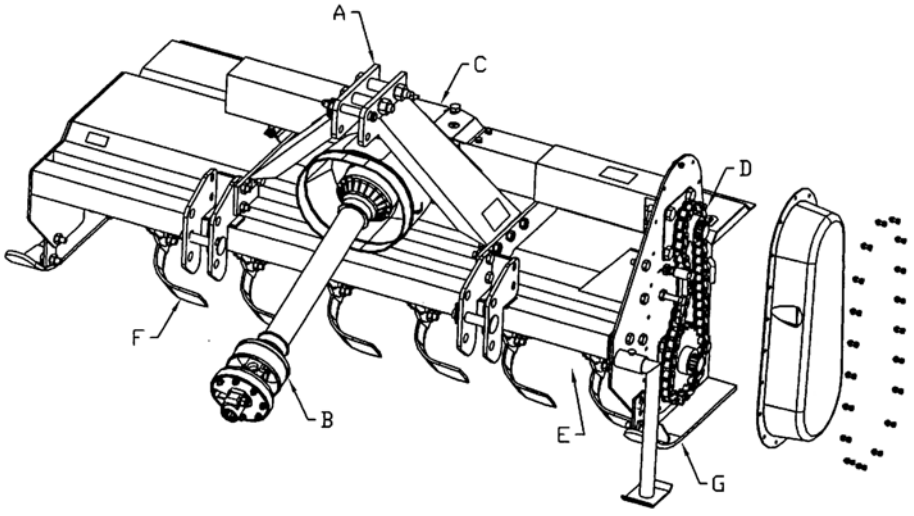

TL–24

Equipment Matching

To insure the safe and reliable operation of the Tiller, it is necessary to use a tractor with the correct specifications. Use the following list as a guide in selecting a tractor to use on the machine.

1. Horsepower: Use Table 1 as a guide in selecting the tractor horsepower appropriate for your width of machine. Use only small Agricultural tractors on this machine.

Table 1 - Horsepower vs. Width

Model	Width	Horsepower
4560	60 inches (1.5m)	45 max.
4572	72 inches (1.8m)	45 max.

ALERT

Do not exceed the recommended horsepower levels. The use of horsepower will void the warranty.

2. 3- Point Hitch: The Tiller is equipped with a Category 1, 3-point hitch. Be sure the tractor 3-point hitch is in the Category 1 configuration. Install the lift arm blocks or shorten the stop chains to place the arms into the non-sway configuration. Refer to the tractor manual for details.

3. Load Sensing Hydraulics: Many newer tractors are equipped with “Load Sensing” hydraulics. It is the responsibility of the operator to set the tractor hydraulic system to provide “float” on the 3-point hitch. Refer to Tractor Manual for details. The float feature will allow the machine to follow the ground contours during operation.

4. PTO Shaft: The tractor must have a 1-3/8" 6 spline 540 rpm PTO shaft to fit the driveline shaft supplied with the machine. Do not use shaft adapters or operate at any other speed. It is not recommended that a tractor with variable speed PTO’s be used on the Tiller. Operating at speeds faster than 540 rpm will overload the drivetrain and lead to early failures.

   Attach the safety chains supplied with the PTO shaft, allowing sufficient slack for the driveline during turns and operation. Check booklet attached to the PTO for instructions.

Driveline Dimension

A PTO driveline is supplied with the machine. To accommodate the variety of 3-point hitch geometry available today, the driveline can be too long for some machines and must be cut. It is very important that the driveline be free to telescope but not bottom out when going through its working range. If the driveline bottoms out, the bearings on both the machine and tractor PTO shaft will be overloaded and fail in a short time.

If cutting the drive is necessary, follow this procedure:

1. Clear the area of bystanders, especially small children.
2. Attach the Tiller to the tractor but do not attach the driveline.
3. Raise the implement until the input gearbox shaft is at the closest point to the tractor output shaft.
4. In this position, measure the dimension between the locking groove on the tractor output shaft and the groove on the Tiller input shaft.
5. Measure the pin to pin dimension on the compressed driveline.

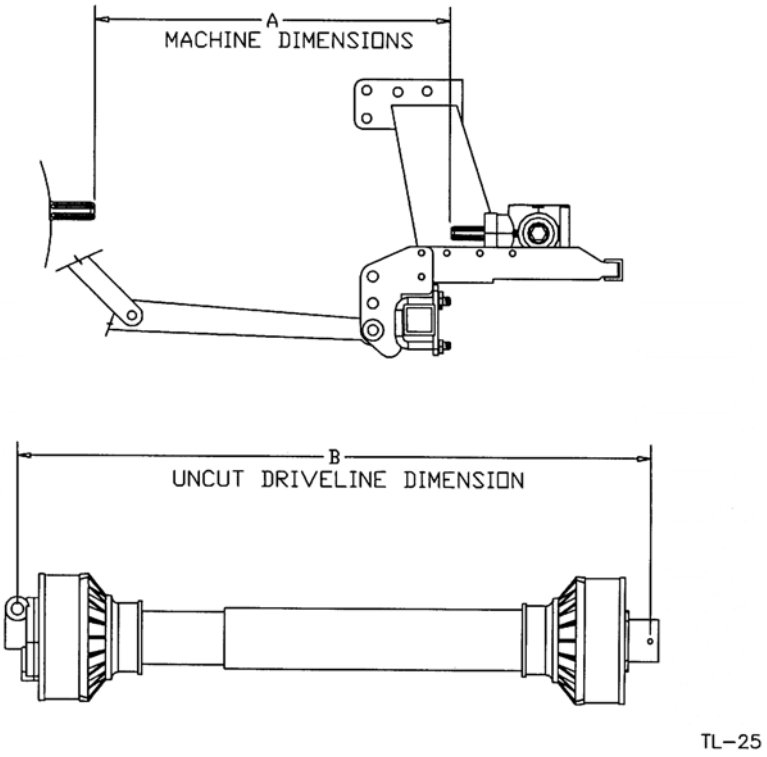

TL–25

6. If the driveline pin to pin dimension (B) exceeds the groove to groove dimension, the driveline should be cut.

7. Pull the driveline apart and cut 1/2 of the dimension determined in step 5 from each end. Add another 1/2" (12mm) to each cut off segment.

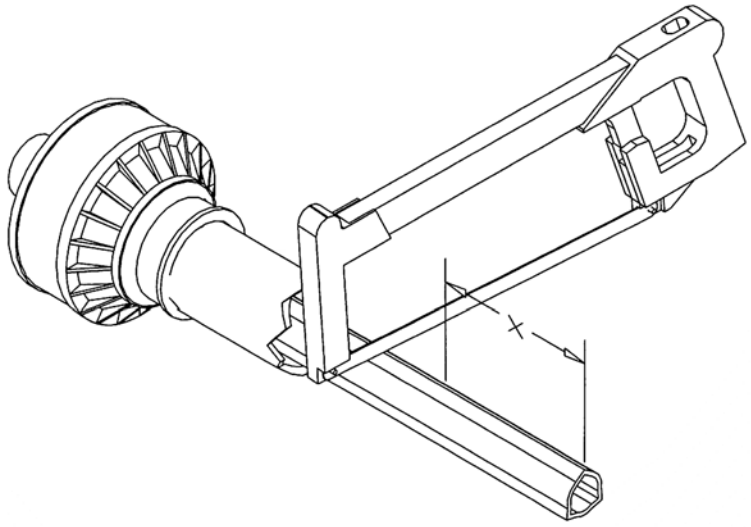

TL–11

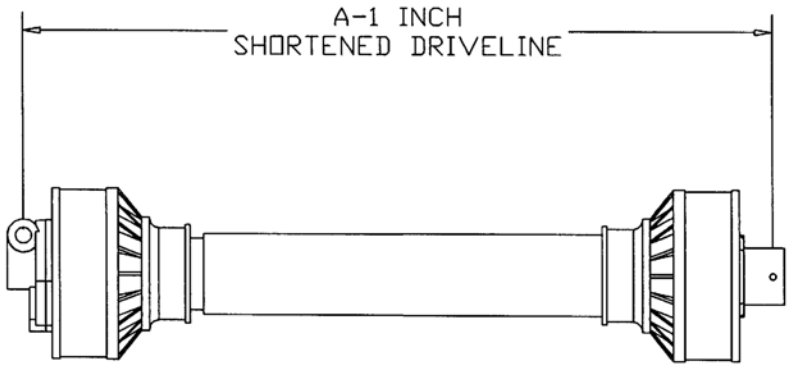

TL–12

8. Be sure to use a hacksaw to cut 1/2 from each end of the separated shaft. Cut both the plastic tube and the metal cores.
9. Use a file to remove the burrs from the edges that were cut.
10. Assemble the two ends of the shaft.
11. Make sure that the shaft can telescope freely. If it does not, separate the two parts and inspect for burrs or cuttings on the shaft ends. Be sure it telescopes freely before installing.
12. Make sure the plastic covering shield is free to rotate on the shaft before installing on the machine.

Attaching/Unhooking

The Tiller should always be located on a level, dry area that is free of debris and other foreign objects. When attaching the machine to a tractor, follow this procedure:

1. Clear the area of bystanders, especially small children.
2. Be sure the tractor 3-point hitch is in the Category 1 configuration and the lift arms are in the non sway configuration (See tractor manual).
3. Make sure there is enough room and clearance to safely back up to the Tiller.
4. Attach the PTO driveline to the Tiller if it was removed for storage (See Assembly).
5. While backing up, align the lift arm balls with the mounting pins on the Tiller.

ALERT — It may be necessary to add weight to the 3-point hitch to lower the lift arms.

6. Stop tractor, set park brake, remove ignition key and wait for all moving parts to stop before dismounting.
7. If your tractor is not equipped with a Quick Hitch:
   - Align the left lower link arm with the mounting pin.
   - Slide the ball over the pin and install the Linch Pin.
   - Use the screw jack on the right lift arm to align the ball with the pin.
   - Slide the ball over the mounting pin and install the Linch Pin.
   - Level the frame using the screw jack.
   - Remove retainer and pin from the mast.
   - Align top link using the turnbuckle.
   - Insert pin and install Linch Pin
   - Level frame using the turnbuckle.
8. Attach the PTO driveline:
   - Check that the driveline telescopes easily and that the shield rotates freely.

CAUTION — Be sure that the driveline does not bottom out when going through its working angles.

   - Attach the driveline to the tractor by retracting the locking pin, slide the yoke over the shaft and push on the yoke until the lock pin clicks into position. Pull on the yoke to be sure it is locked in position.
   - Attach the anchor chain on the driveline shield to the frame.

9. Use the 3-point hitch to raise the machine.
10. Remove the blocks from under the Depth Gauge Shoes.
11. Reverse the above procedure when unhooking from the tractor.

Field Operation

Farm King 45 Series Rotary Tillers are designed with the inherent flexibility of operating well in almost any kind of soil and terrain conditions. However, the operator has the responsibility of being familiar with all operating and safety procedures and following them.

Each operator should review this section of the manual at the start of the season and as often as required to be familiar with the machine. When using, follow this procedure:

1. Review and follow the pre-operation checklist. Review Safety Instructions.
2. Attach the tractor to the machine.
3. Before going to the field review Transporting Section, pull into the field and position the machine in a level area.
4. Lower into working position.
5. Set the machine.
   - Level the frame: Use the screw jack on the right lift arm to level the frame from side to side.
   - Depth: Use the Depth Gauge Shoes on each side to set the operating depth. Position the Depth Gauge Shoes in the top hole for shallow tilling and in the bottom hole for deep tilling.

	ALERT	In soft soil conditions, the skid plates become less effective and sink into the ground. Use the turnbuckle on the top link to set the frame angle so the bottom of the Depth Gauge Shoes are level when operating.

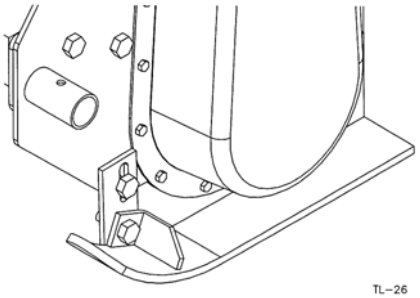

- Offset: The Category Pin Brackets can be moved 3" to 4" along the Deck Assembly to either side of center if required. Center the machine for normal operation. Offset if the tire tracks are wider than the machine or when tilling around trees, bushes or other areas.
- Drag Shield: Adjust the chain in the Adjustment Bracket to set the height of the Drag Shield. Set the Drag Shield to just contact the tilled soil when operating.

6. Align the unit with the working area.

7. Starting Machine:

   - Run the engine at low idle
   - Slowly engage the PTO control to start the machine.
   - Slowly bring the engine to the rated PTO speed. Never exceed rated speed.
   - Lower the machine to the ground and proceed down the field.

8. Stopping Machine:

   - Slowly decrease engine speed to low idle.
   - Raise machine out of the ground.
   - Disengage PTO clutch slowly.

CAUTION

Place all controls in neutral, lower machine, stop engine, set park brake, remove ignition key and wait for all moving parts to stop before dismounting.

9. Ground Speed: Travel speed can vary between 2 and 5 mph (3 and 8 km/h) depending on the soil and terrain conditions. It is the responsibility of the operator to note the condition of the job being done and set the speed to obtain a quality tilling job and maintain control of the machine. The speed can be increased to optimize tilling. Decrease speed if you want the soil worked to a finer texture.

10. Operating Hints:

    - Determine the moisture content of the soil before starting. Soil that is too wet will "ball-up" in the rotor blades making tilling impossible. Sandy soils normally can be worked better than heavy clay or loam soils. It is the responsibility of the operator to determine the soil type and moisture content before starting. It may be necessary to wait for the soil to dry out before starting to work.
    - Set the length of the Top Link to obtain the quality of the job desired without needlessly using power and fuel in churning the soil. Use the condition of the seedbed as your guide.
    - When tilling hard or compacted soils, it is recommended that two passes be used when working. Use the Depth Gauge Shoes on each side of the frame to adjust the tilling depth of the machine. The second pass should be made at an angle to the first to give a consistent job and minimize compaction.
    - Always remove heavy crop cover, all grass and weeds, before starting to prevent rotor plugging.
    - The rotation of the Tines propel the machine in the forward direction. Always use the tractor transmission to control the speed of forward travel.
    - Always disengage the PTO control and raise the machine out of the ground before depressing the master clutch on the tractor.
    - Use low gear on the tractor to start the job. Increase the speed of forward travel only as the quality of the job and power available will allow.
    - If the slip clutch slips, reduce the ground speed or raise the machine slightly out of the ground.

Transporting

When transporting the machine, review and follow these instructions:

1. Be sure all bystanders are clear of the machine.
2. Be sure that the machine is securely attached to the tractor and all retainer pins are installed.
3. Clean the SMV emblem, lights and reflectors and be sure they are working.
4. Be sure you are in compliance with all applicable lighting and marking regulations when transporting. Check with your local authorities.
5. Be sure your machine can clearly be seen by overtaking and oncoming traffic.
6. Keep to the right and yield the right of way to allow faster traffic to pass. Drive on the road shoulder if permitted by law.
7. Do not allow riders.
8. Always use hazard flashers on the tractor when transporting unless prohibited by law.
9. Use pilot vehicles front and rear when transporting during times of limited visibility.
10. Never transport the machine faster than 20 mph (32 km/h). The ratio of the tractor weight to the Tiller weight plays an important role in defining acceptable travel speed. Table 2 summarizes the recommended travel speed to weight ratio.

Table 2 - Speed vs. Weight Ratio

Road Speed	Weight of fully equipped or loaded implement(s) relative to weight of towing machine
Up to 20 mph (32 km/h)	1 to 1, or less
Up to 10 mph (16 km/h)	2 to 1, or less
Do not tow	More than 2 to 1

Theory of Operation

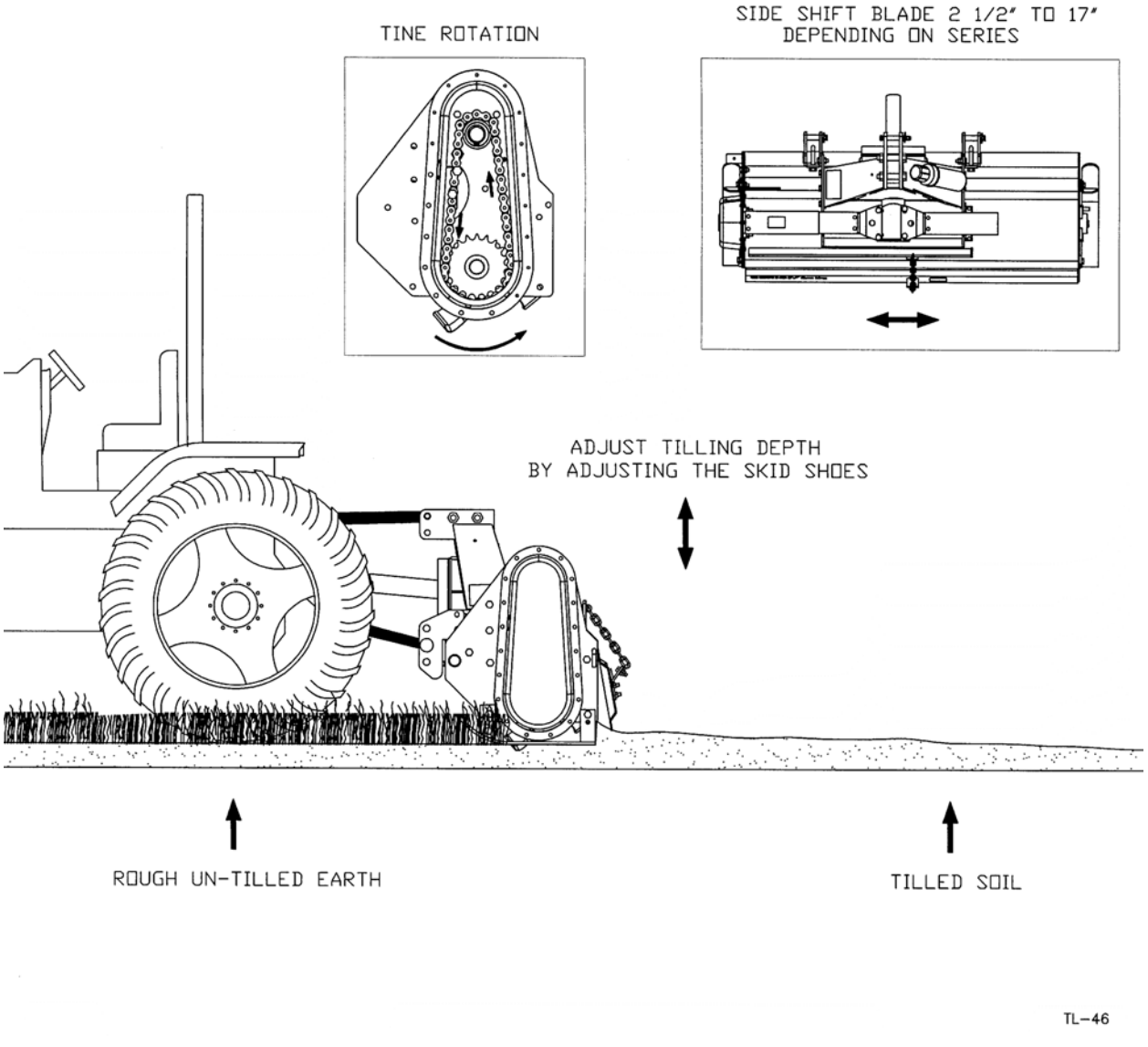

Storage

After the season's use, the machine should be thoroughly inspected and prepared for storage. Repair or replace any worn or damaged components to prevent any unnecessary down time at the start of next season. To insure a long, trouble free life, this procedure should be followed when preparing the unit for storage:

1. Clear the area of bystanders, especially small children.
2. Thoroughly wash the machine using a pressure washer to remove all dirt, mud, debris and residue.
3. Inspect the blades and rotors for damage or entangled material. Repair or replace damaged parts. Remove all entangled material.
4. Change the oil in the gear box.
5. Lubricate all grease fittings. Make sure that all grease cavities have been filled with grease to remove any water residue from the washing.
6. Touch up all paint nicks and scratches to prevent rusting.
7. Move to storage area.
8. Select an area that is dry, level and free of debris.
9. Place blocks under the Depth Gauge Shoes.
10. Unhook from tractor.
11. If the machine cannot be placed inside, cover with a waterproof tarpaulin and tie securely in place.
12. Store the machine in an area away from human activity.
13. Do not allow children to play on or around the stored machine.

Maintenance

Service

Follow Maintenance Safety Instructions as outlined.

Fluids and Lubricants

1. Hydraulic Oil:
    - Use standard hydraulic oil for all operating conditions.
2. Gear Box Oil:
    - Use an SAE 85W90 gear oil for all operating conditions.
    - Gear Box Capacity: 1 U.S. quart (0.85 liter)
3. Chain Case Grease:
    - Use a multi purpose grease for all operating conditions.
    - If chain case is removed, refill with 800 grams of grease.
4. Storing Lubricants:
    - Your machine can operate at top efficiency only if clean lubricants are used. Use clean containers to handle all lubricants. Store them in an area protected from dust, moisture and other contaminants.

Greasing

Use a Maintenance Checklist to keep a record of all scheduled maintenance.

1. Use a hand held grease gun for all greasing.
2. Wipe grease fitting with a clean cloth before greasing, to avoid injecting dirt and grit.
3. Replace and repair broken fittings immediately.
4. If fittings will not take grease, remove and clean thoroughly. Also clean lubricant passageway. Replace fitting if necessary.

Servicing Intervals

If fittings will not take grease, remove and clean thoroughly. Also clean lubricant passageway. Replace fitting if necessary.

8 Hours or Daily: Telescoping Tubes and Quick Disconnect 20 Hours

1. Lubricate PTO driveline (7 locations).

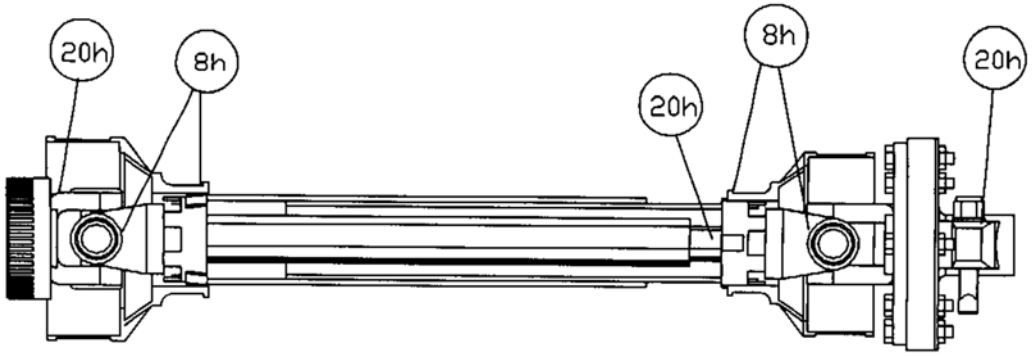

TL–27

⚠	ALERT	When using the safety chains supplied with the PTO shaft, the shield bearings must be kept lubricated.

80 Hours or Once a Season:

2. Lubricate rotor driven end bearing (1 location)
3. Lubricate rotor drive end bearing (1 location).
4. Lubricate chain drive bearing (1 location).
   - use 3 squirts only.
   - push grease in gradually

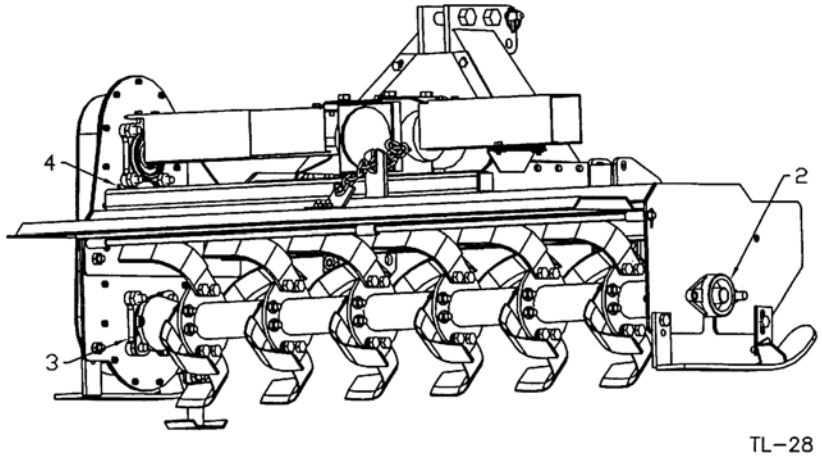

TL–28

40 Hours

1. Check gearbox oil level.
   - add as required.
2. Add approximately 10 squirts of grease in chain case.

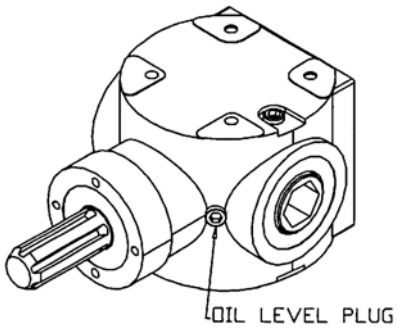

TL–16

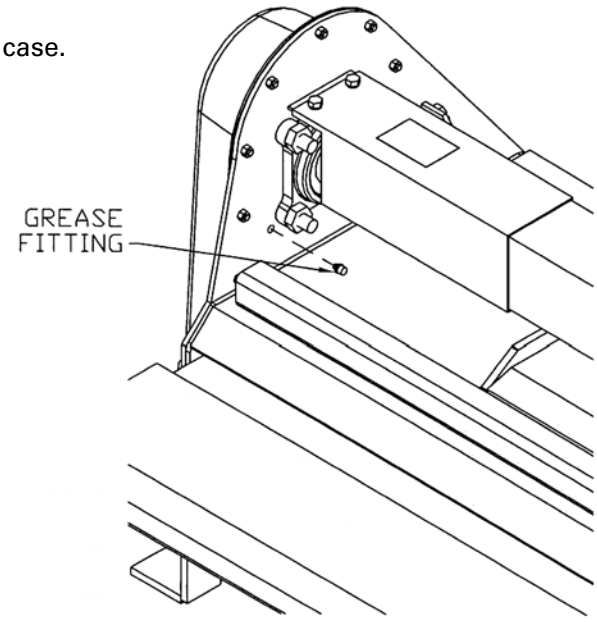

TL–29

Annually

1. Change gear box oil. Refill with SAE 85W90 gear oil.
2. Wash machine.

A-frame Adjustment

When moving the hitch along the front frame to adjust the offset, follow this procedure.

1. Clear the area of bystanders, especially small children.
2. Raise the machine so it is slightly out of the ground.
3. Loosen the u-bolts through the Category Pin brackets.
4. Slide the hitch along the Deck until the machine is set at the desired offset.
5. Tighten the u-bolts to their specified torque.

Tine Replacement

When the Tines are damaged in any way, they will need to be replaced. When replacing, follow this procedure:

1. Clear the area of bystanders, especially small chidlren.
2. Raise the machine until the Tines are slightly above the ground.
3. Stop engine, set park brake, remove ignition key and wait for all moving parts to stop before dismounting.
4. Place blocks under each Depth Gauge Shoe to support the machine.
5. Raise the Drag Shield and secure in the up position.
6. Wear leather or heavy canvas gloves when handling Tines.
7. Remove mounting bolts from Tines.

ALERT

An alternate method would be to disconnect the machine from the tractor and tip it forward on its nose.

8. Install a new replacement blade and tighten the mounting bolts to their specified torque.
9. Lower the rear gate.
10. Remove the blocks under the skid plates.

Slip Clutch

During normal operation, the slip clutch can release and slip when encountering an obstruction or when overloaded. It is designed to slip when the load exceeds 3 times its nominal rating. When the clutch slips too frequently during normal operating conditions, it is necessary to replace the clutch linings. **NOTE:** The PTO shafts are shipped with the slip clutch disengaged. There are four socket set screws on the inside of the clutch assembly, which are turned out as far as they go to engage the clutch. Disengage clutch by turning set screws in fully.

To replace clutch linings, follow this procedure:

1. Disengage the clutch by turning the four set screws all the way in.
2. Remove the outside bolts from the clutch assembly and replace the clutch linings.
3. When re-tightening the bolts, stop when the clutch spacer starts to touch the clutch plates. You should be able to just move the spacer by hand when you have the correct bolt torque.
4. Engage clutch by turning out set screws after assembly is complete.

Clutch Maintenance

1. Before first use or after storage of more than one month, the clutch should be checked.
2. Disengage clutch by turning in the four socket set screws.
3. Run the PTO at low idle to slip the clutch linings. This will help remove the dirt, corrosion, and surface gloss from the clutch plates and also ensure that the linings are loose.
4. Engage the clutch by turning out the socket set screws.
5. Normally the clutch will slip at a 20% higher torque after the "run in" than before.
6. Check the temperature of the clutch after running for 20 minutes and every 8 hours after that. If the clutch is hot to the touch or smokes, check that the outside bolts are correctly tightened as explained in slip clutch section. If clutch still slips, linings may have to be replaced.

Troubleshooting

The Buhler Farm King 65 Series Rotary Tiller moves curved Tines on a turning rotor through the ground to break it up and prepare a seed bed. It is a simple and reliable system that requires minimal maintenance.

In the following section, we have listed many of the problems, causes and solutions to the problems that you may encounter.

If you encounter a problem that is difficult to solve, even after having read through this trouble shooting section, please call your local Buhler Farm King distributor dealer. Before you call, please have this Operator's Manual and the serial number from your Tiller ready.

Rotor won't turn	
Cause	**Solution**
Slip clutch slipping or replace friction plates.	Check that clutch is engaged or replace friction plates.
PTO clutch slipping.	Set PTO clutch. See tractor manual.
Broken drive chain.	Repair or replace chain.

Untilled ground behind machine	
Cause	**Solution**
3-point hitch system not set.	Set 3-point hitch in float. See tractor manual.
Travelling too fast.	Travel slower
Ground very hard.	Slow down. Make 2 passes.
Machine not leveled.	Adjust screw jack on 3-point arm. Adjust Depth Gauge Shoes.

Seed bed lumpy	
Cause	**Solution**
Travelling too fast.	Slow down. Make 2 passes.

Uneven seed bed	
Cause	**Solution**
Machine not level.	Level machine.
Drag Sheild too high.	Adjust Drag Sheild.

Bolt Torque

Checking Bolt Torque

The tables shown below give correct torque values for various bolts and hex bolts. Tighten all bolts to the torques specified in chart unless otherwise noted. Check tightness of bolts periodically, using bolt torque chart as a guide. Replace hardware with the same strength bolt.

Bolt Torque*						
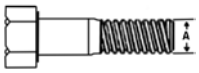						
Bolt Diameter	Grade 2 Bolts		Grade 5 Bolts		Grade 8 Bolts	
(inches)	SAE 2		SAE 5		SAE 8	
"A"	(lb-ft)	(N.m)	(lb-ft)	(N.m)	(lb-ft)	(N.m)
0.25 (1/4)	6	8	9	12	12	17
0.313 (5/16)	10	13	19	25	27	36
0.375 (3/8)	20	27	33	45	45	63
0.438 (7/16)	30	42	53	72	75	100
0.5 (1/2)	45	61	80	110	115	155
0.563 (9/16)	70	95	115	155	165	220
0.625 (5/8)	95	128	160	215	220	305
.75 (3/4)	165	225	290	390	400	540
0.875 (7/8)	170	230	420	570	650	880
1	225	345	630	850	970	1320

Torque figures indicated above are valid for non-greased or non-oiled threads and heads unless otherwise specified. Therefore, do not grease or oil bolts or hex bolts unless otherwise specified in this manual. When using locking elements, increase torque values by 5%.

* Torque value for bolts and hex bolts are identified by their head markings.

45 Series Rotary Tiller Assembly Drawings

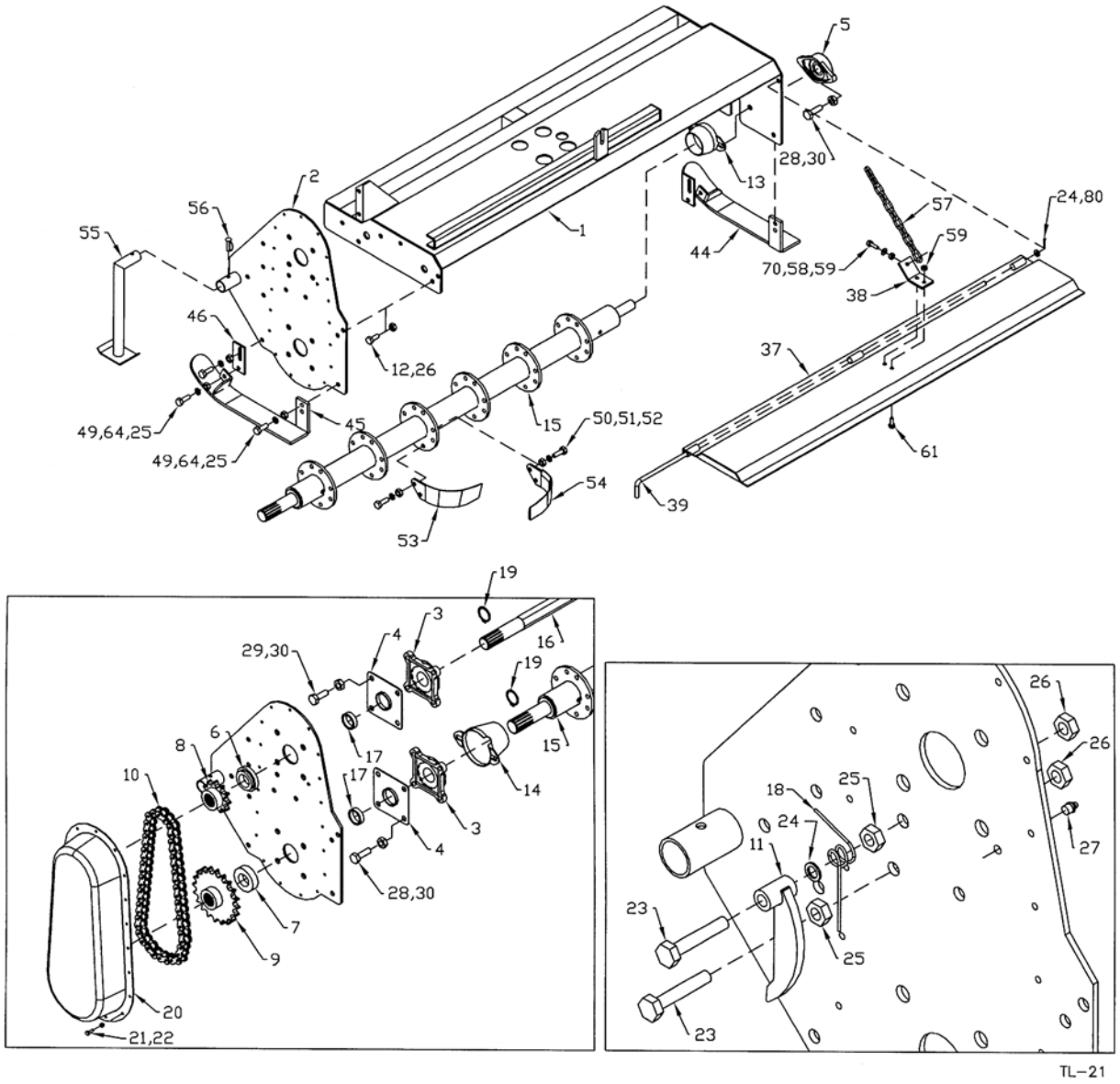

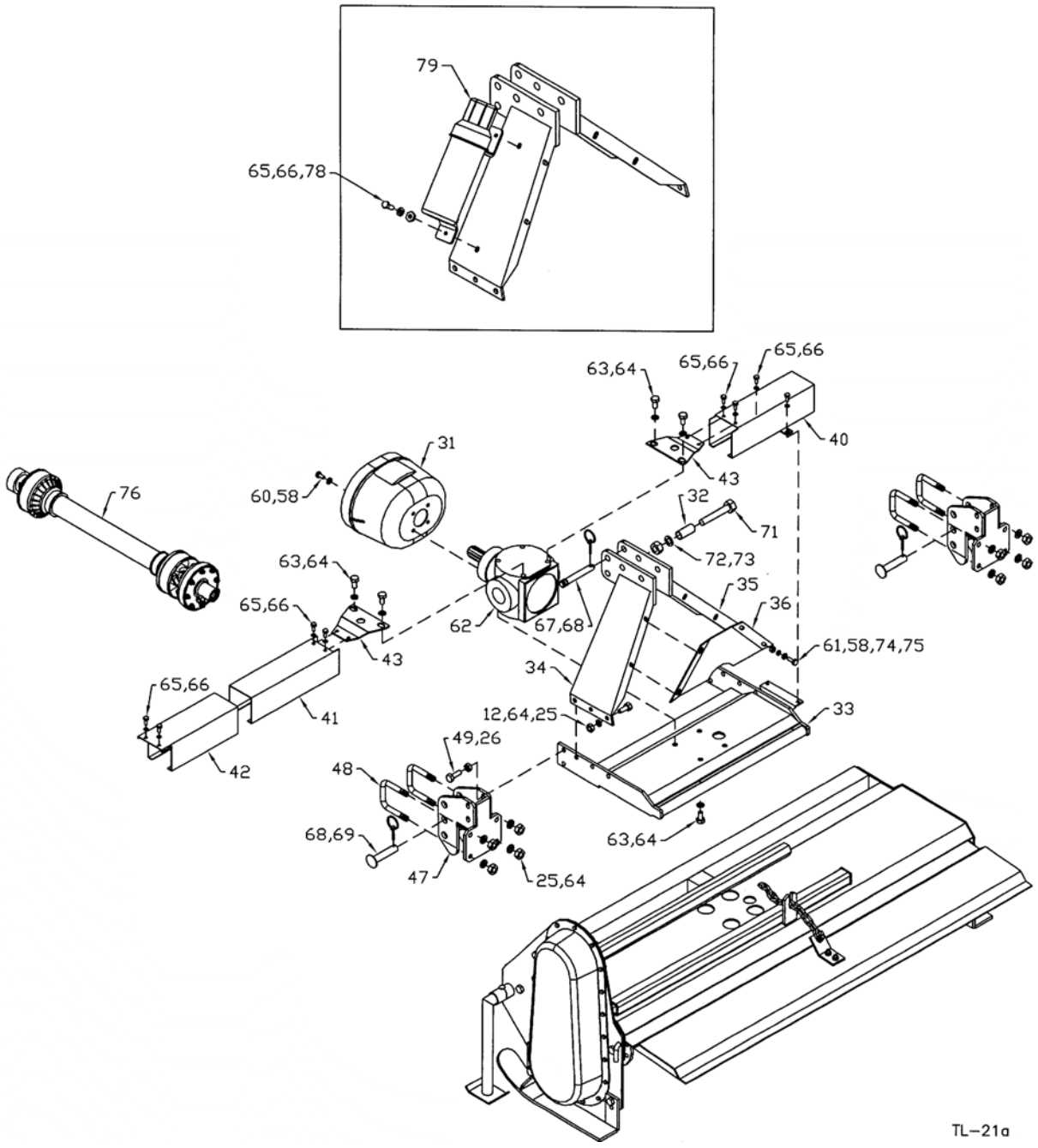
79
65,66,78
63,64
65,66
65,66
40
43
31
60,58
76
32
71
72,73
63,64
65,66
43
35
36
62
67,68
61,58,74,75
34
65,66
41
42
12,64,25
33
49,26
48
68,69
47
25,64
63,64
TL–21a

When Ordering Parts

Always give your dealer the Model, Color and Serial Number of your machine to assist him in ordering and obtaining the correct parts. Use the exploded view and tabular listing of the area of interest to exactly identify the required part.

Item	Part Number	Description
1	906821	Deck Weldment (60")
	906822	Deck Weldment (72")
2	906903	Side Plate Weldment - L
3	967363	4-Bolt 1-5/8" Flange Bearing
	967364	1-5/8" Bearing Only
4	982006422	1-5/8" Oil Seal Plate
5	912300131	2-Bolt 1-1/4" Flange Bearing
	961676	1-1/4" Bearing Only (greasable)
6	906843	Top Sprocket Spacer 3"OD x 13/16"
7	959223	Bottom Sprocket Spacer 3"OD x 13/16"
8	906845	Sprocket #80 11T 1-5/8" Bore
9	906844	Sprocket #80 20T 1-5/8" Bore
10	906846	Roller Chain #80H x 44 Link w/ Connector
11	967377	Chain Tensioner Weldment
12	81620	1/2" x 1-1/4" Hex Bolt
13	906827	Shaft Cover Weldment - Right
14	906828	Bearing Cover Weldment - Left
15	906912	Shaft Weldment (60")
	906916	Shaft Weldment (72")
16	959228	Hex Shaft 1-5/8" x 39" (60")
	959229	Hex Shaft 1-5/8" x 44" (72")
17	912303601	1-5/8" Oil Seal
18	982005711	Tension Spring
19	912301557	1-5/8" Retainer Ring
20	906904	Chain Guard
21	81525	1/4" x 3/4" Hex Bolt
22	84498	1/4" Lock Nut
23	81627	1/2" x 3" Hex Bolt
24	84048	1/2" Flat Washer
25	81636	1/2" Hex Nut
26	812364	1/2" Lock Nut
27	967164	Drive-In Grease Fitting
28	84299	5/8" x 2" Hex Bolt
29	84270	5/8" x 1-3/4" Hex Bolt
30	812482	5/8" Lock Nut
31	907349	Safety Cone

Item	Part Number	Description
32	903171	Spacer 1.05"OD x 2-1/4"
33	906837	A-Frame Bottom Weldment
34	903159	A-Frame Top Weldment - Left
35	903160	A-Frame Top Weldment - Right
36	906838	A-Frame Brace Plate
37	909731	Drag Shield Weldment (60")
	909732	Drag Shield Weldment (72")
38	967357	Drag Shield Bracket
39	909713	Drag Shield Hinge Rod (60")
	909714	Drag Shield Hinge Rod (72")
40	903320	Drive Shaft Shield Weldment
41	982605211	Drive Shaft Shield Inner 15"Long (60")
	982725211	Drive Shaft Shield Inner 18"Long (72")
42	982605311	Drive Shaft Shield 13"Long (60")
	982725311	Drive Shaft Shield Outer 16"Long (72")
43	906835	Drive Shaft Shield Mount Weldment
44	906923	Depth Gauge Shoe Weldment - Right
45	906924	Depth Gauge Shoe Weldment - Left
46	983000241	Adjustment Mount Bracket
47	907572	Cat. Pin Bracket Weldment
48	907573	1/2" x 10-1/4" U-Bolt
49	84277	1/2" x 1-1/2" Hex Bolt
50	812763	1/2" x 1-1/2" Hex Bolt NF Grade 8
51	9812767	1/2" Lock Washer Grade 8
52	812765	1/2" Hex Nut NF Grade 8
53	967484	LH Tine
54	967483	RH Tine
55	982000500	Side Stand Weldment
56	912301660	Snapper Clip
57	983000471	1/4" x 11 Link Chain
58	84000	3/8" BS Flat Washer
59	812363	3/8" Lock Nut Grade 8
60	84072	3/8" x 3/4" Hex Bolt
61	86170	3/8" x 1" Hex Bolt
62	906913	Gearbox 2050
63	81619	1/2" x 1" Hex Bolt
64	81637	1/2" Lock Washer
65	81549	5/16" x 3/4" Hex Bolt
66	81569	5/16" Lock Washer
67	965807	Cat. 1 Top Link Pin
68	965911	7/16" Linch Pin

Item	Part Number	Description
69	967361	7/8" x 4" Clevis Pin
70	86171	3/8" x 1-1/4" Hex Bolt
71	811790	3/4" x 4-1/2" Hex Bolt
72	81701	3/4" Lock Washer
73	81700	3/4" Hex Nut
74	81593	3/8" Lock Washer
75	81592	3/8" Hex Nut
76	F0409	PTO Shaft
78	81568	5/16" Hex Nut
79	909277	Manual Holder
80	9812432	1-1/4" Cotter Pin

PTO Assembly Drawing

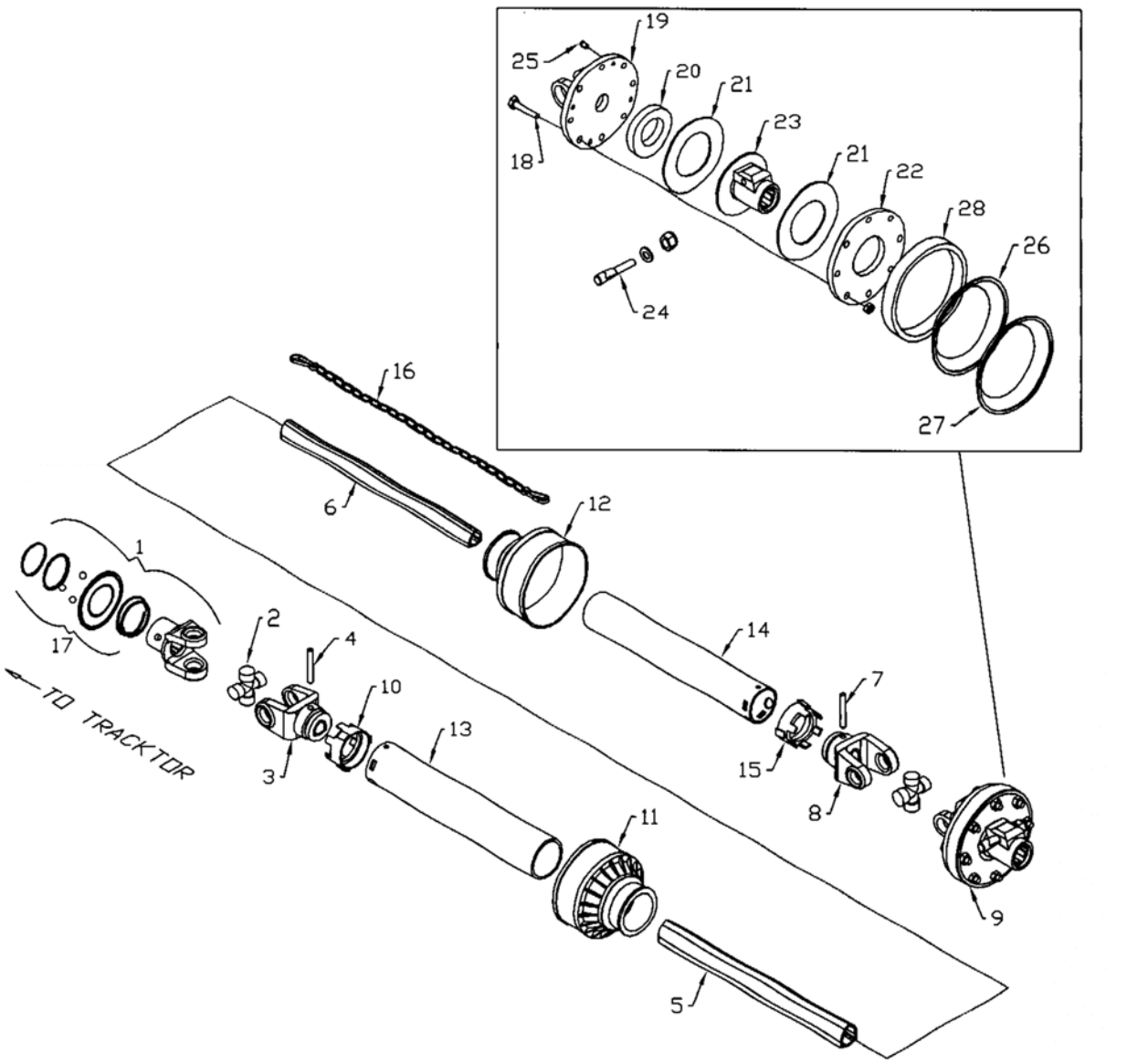

Item	Part Number	Description
	F0409	Shaft Complete
	907193	Outer Half Shaft - Tractor
	907194	Inner Half Shaft - Implement
1	907186	Yoke - Tractor End
2	936540	Repair Kit
3	936344	Outer Tube Yoke
4	936351	Flex Pin Outer Yoke
5	907187	Cardan Tube, Outer
6	907188	Cardan Tube, Inner
7	936350	Flex Pin, Inner
8	936345	Inner Tube Yoke
9	907189	Torque Lim Ft32r/4
10	966209	Shield Support, Outer
11	966207	Outer Shld Cone
12	966208	Inner Shld Cone
13	907190	Safety Tube, Outer
14	907191	Safety Tube, Inner
15	966210	Shield Support, Inner
16	936402	Complete Chain
17	907192	Complete Sleeve
18	936519	Bolt & Nut
19	907574	Flange Yoke
20	966223	Antifriction Sleeve
21	907576	Clutch Lining
22	907577	Pressure Plate
23	907578	Flanged Hub 1-3/8" Z6
24	910-075	Taper Pin Kit
25	936512	Set Screw, Special
26	907579	Belleville Spring 3.5mm
27	907580	Belleville Spring 2.5mm
28	907581	Spacer Band FT32

Gearbox Drawing

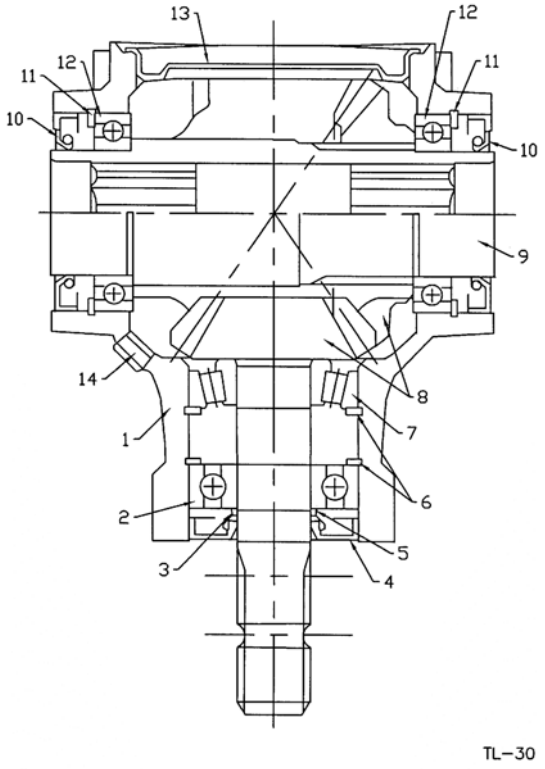

Item	Part Number	Description
	906913	Gearbox Complete
1	907151	Housing
2	907152	Ball Bearing
3	967303	Snap Ring E.35 Din 471/2
4	907153	Oil Seal
5	907154	Ring
6	967305	Snap Ring 1.80 Din 472
7	907155	Roller Bearing
8	907160	Gear Set
9	907161	Hex Shaft
10	907162	Oil Seal
11	967398	Snap Ring
12	967328	Ball Bearing
13	907163	Cover
14	967312	3/8" Oil Plug Din 906

Shipping Kit and Bundle Numbers

The following is a list of Kit Numbers for this product and the Bundle Numbers, Descriptions, and Quantities for each Kit.

Quantity	Bundle Number	Description
C4560 - 60" Tiller c/w PTO		
1	F0855	Deck Assembly
C4572 - 72" Tiller c/w PTO		
1	F0856	Deck Assembly

Farm King Limited Warranty

This document limits your warranty rights.

Base Limited Warranty

Buhler Industries Inc. provides this warranty only to original retail purchasers of its product. Buhler Industries Inc. warrants to such purchasers that all Buhler Industries Inc. manufactured parts and components used and serviced as provided for in the Operator's Manual shall be free from defects in materials and workmanship for a period following delivery to the original retail purchaser of 12 months (80 days for commercial applications). This limited warranty applies only to those parts and components manufactured by Buhler Industries Inc. Parts and components manufactured by others are subject to their manufacturer's warranties, if any.

Buhler Industries Inc. will fulfill this limited warranty by, at its option, repairing or replacing any covered part that is defective or is the result of improper workmanship, provided that the part is returned to Buhler Industries Inc. within thirty (30) days of the date that such defect or improper workmanship is, or should have been, discovered. Buhler Industries Inc. reserves the right to either inspect the product at the buyer's location or have it returned to the factory for inspection. Parts must be returned through the selling representative and the buyer must prepay transportation charges.

Buhler Industries Inc. will not be responsible for repairs or replacements that are necessitated, in whole or part, by the use of parts not manufactured by or obtained from Buhler Industries Inc. Under no circumstances are component parts warranted against normal wear and tear. There is no warranty on product pump seals, product pump bearings, rubber product hoses, pressure gauges, or other components that require replacement as part of normal maintenance. Also: Buckets and Bucket Tines carry no warranty, Bent Spears carry no warranty, Snowblower Fan Shafts carry no warranty, Mower Blades carry no warranty, Portable Auger Parts Have Two (2) Year Warranty, Loader Parts Have Two (2) Year Warranty. The purchaser is solely responsible for determining suitability of goods sold. This warranty is expressly in lieu of all other warranties expressed or implied. Buhler Industries Inc. will in no event be liable for any incidental or consequential damages whatsoever. Nor for any sum in excess of the price received for the goods for which liability is claimed.

Repair Parts Limited Warranty

Buhler Industries Inc. warrants Farm King replacement parts purchased after the expiration of the Buhler Industries Inc. Limited Warranty, and used and serviced as provided for in the Operator's Manual, to be free from defects in materials or workmanship for a period of thirty (30) days from the invoice date for the parts. Buhler Industries Inc. will fulfill this limited warranty by, at its option, repairing or replacing any covered part that is defective or is the result of improper workmanship, provided that the part is returned to Buhler Industries Inc. within thirty (30) days of the date that such defect or improper workmanship is, or should have been, discovered. Such parts must be shipped to Buhler Industries Inc. at the purchaser's expense.

What is Not Covered

Under no circumstances does this limited warranty cover any components or parts that have been subject to the following: negligence; alteration or modification not approved by Buhler Industries Inc.; misuse; improper storage; lack of reasonable and proper maintenance, service, or repair; normal wear; damage from failure to follow operating instructions; accident; and/or repairs that have been made with parts other than those manufactured, supplied, and or authorized by Buhler Industries Inc.

Authorized Dealer and Labor Costs
Repairs eligible for labor under this limited warranty must be made by Buhler Industries Inc. or an authorized Farm King dealer. Buhler Industries Inc. retains the exclusive discretion to determine whether it will pay labor costs for warranty repairs or replacements, and the amount of such costs that it will pay and the time in which the repairs will be made. If Buhler Industries Inc. determines that it will pay labor costs for warranty work, it will do so by issuing a credit to the dealer's or distributor's account. Buhler Industries Inc. will not approve or pay invoices sent for repairs that Buhler Industries Inc. has not previously approved. Warranty service does not extend the original term of this limited warranty.

Warranty Requirements
To be covered by warranty, each Farm King new product must be registered with Buhler Industries Inc. within thirty (30) days of delivery to original retail purchaser. If the customer decides to purchase replacement components before the warranty disposition of such components is determined, Buhler Industries Inc. will bill the customer for such components and then credit the replacement invoice for those components later determined to be covered by this limited warranty. Any such replacement components that are determined not be covered by this limited warranty will be subject to the terms of the invoice and shall be paid for by the purchaser.

Warranty Claims:
Warranty requests must be prepared on Buhler Industries Inc. Warranty Claim Forms with all requested information properly completed. Warranty Claims must be submitted within a thirty (30) day period from date of failure repair.

Warranty Labor:
Any labor subject to warranty must be authorized by Buhler Industries Inc. The labor rate for replacing defective parts, where applicable, will be credited at 100% of the dealer's posted shop rate. Defective parts will receive an extra 10% discount to assist with freight or other incidental costs.

Exclusive Effect of Warranty and Limitation of Liability

TO THE EXTENT PERMITTED BY LAW, BUHLER INDUSTRIES INC. DISCLAIMS ANY WARRANTIES, REPRESENTATIONS, OR PROMISES, EXPRESS OR IMPLIED, AS TO THE QUALITY, PERFORMANCE, OR FREEDOM FROM DEFECT OF THE COMPONENTS AND PARTS COVERED BY THIS WARRANTY AND NOT SPECIFICALLY PROVIDED FOR HEREIN.

TO THE EXTENT PERMITTED BY LAW, BUHLER INDUSTRIES INC. DISCLAIMS ANY IMPLIED WARRANTIES OF MERCHANTABILITY AND FITNESS FOR A PARTICULAR PURPOSE ON ITS PRODUCTS COVERED HEREIN, AND DISCLAIMS ANY RELIANCE BY THE PURCHASER ON BUHLER INDUSTRIES INC.'S SKILL OR JUDGMENT TO SELECT OR FURNISH GOODS FOR ANY PARTICULAR PURPOSE. THE PURCHASER'S ONLY AND EXCLUSIVE REMEDIES IN CONNECTION WITH THE BREACH OR PERFORMANCE OF ANY WARRANTY ON PRODUCTS MANUFACTURED BY BUHLER INDUSTRIES INC. ARE THOSE SET FORTH HEREIN. IN NO EVENT SHALL BUHLER INDUSTRIES INC. BE LIABLE FOR INCIDENTAL OR CONSEQUENTIAL DAMAGES (INCLUDING, BY WAY OF EXAMPLE ONLY AND NOT LIMITATION, LOSS OF CROPS, LOSS OF PROFITS OR REVENUE, OTHER COMMERCIAL LOSSES, INCONVENIENCE, OR COST OF REPLACEMENT OF RENTAL EQUIPMENT). IN NO EVENT SHALL FARM KING'S CONTRACT OR WARRANTY LIABILITY EXCEED THE PURCHASE PRICE OF THE PRODUCT.

(Note that some provinces or states do not allow limitations on how long an implied warranty lasts or the exclusion or limitation of incidental or consequential damages, so the above limitations and exclusion may not apply to you.) This warranty gives you specific legal rights and you may also have other rights, which vary from province to province or state to state.

Buhler Industries Inc. neither assumes nor authorizes any person or entity, including its selling representatives, to assume any other obligations or liability in connections with the sale of covered equipment, or to make any other warranties, representations, or promises, express or implied, as to the quality, performance, or freedom from defect of the components and parts covered herein. No one is authorized to alter, modify, or enlarge this limited warranty, or its exclusions, limitations and reservations.

Corrections of defects and improper workmanship in the manner, and for the applicable time periods, provided for herein shall constitute fulfillment of all responsibilities of Buhler Industries Inc. to the purchaser, and Buhler Industries Inc. shall not be liable in negligence, contract, or on any other basis with respect to the subject equipment.

This limited warranty is subject to any existing conditions of supply which may directly affect Buhler Industries Inc.'s ability to obtain materials or manufacture replacement parts.

Buhler Industries Inc. reserves the right to make improvements in design or changes in specifications to its products at anytime, without incurring any obligation to owners of units previously sold.

Government Legislation:
Warranty terms and conditions are subject to provincial or state legislation.

Important Note: This warranty does not apply to rentals.

www.farm-king.com

Farm King

1330 43rd Street NW
Fargo, ND USA 58102
Ph.: 701.282.7014 | Fax: 701.282.5865
Toll Free: 888.524.1004
E-mail: info@buhler.com
www.farm-king.com

Equipment shown is subject to change without notice.
©2010 Buhler Trading Inc. Printed in USA. TSX:BUI

bühler | *a division of Buhler Industries Inc.*